DUTCH MEDIA TOOLS

USER MANUAL

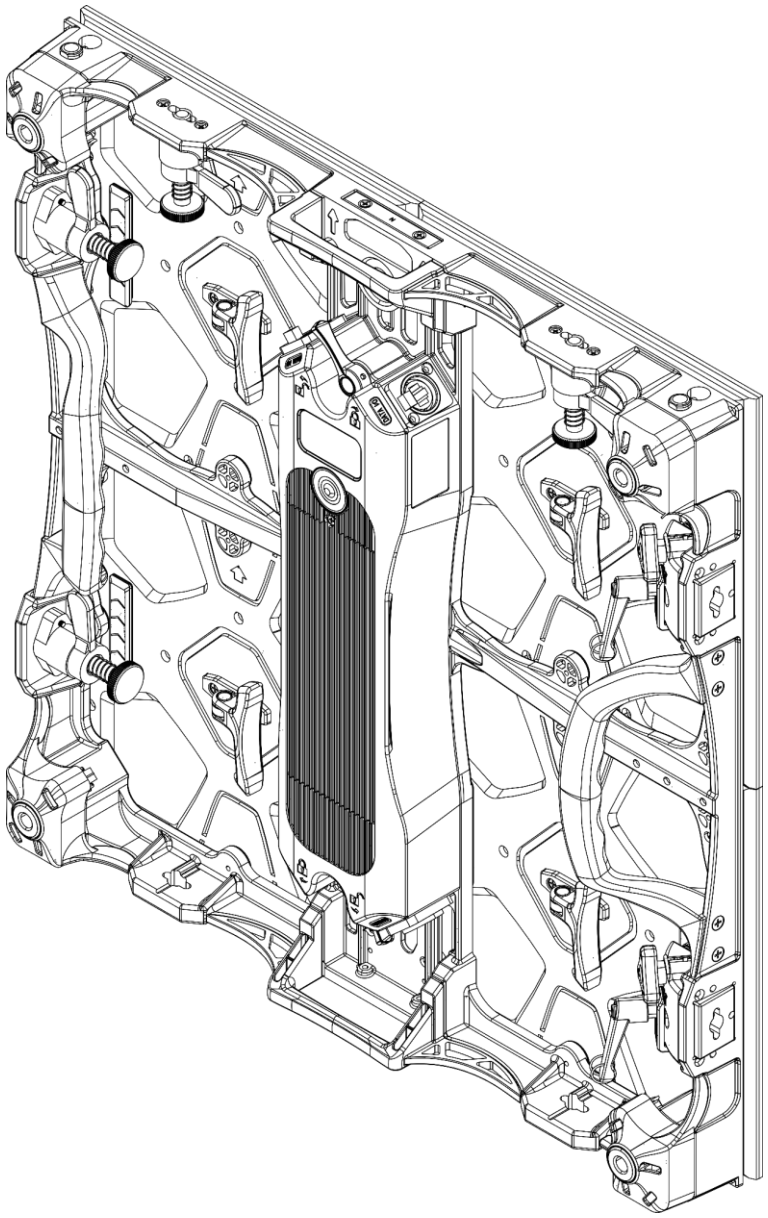

ENGLISH

Alpha Series A3.9i V1

Product code: 101810

Highlite International B.V. – Vestastraat 2 – 6468 EX – Kerkrade – the Netherlands

Preface

Thank you for purchasing this DMT product.

The purpose of this user manual is to provide instructions for the correct and safe use of this product.

Keep the user manual for future reference as it is an integral part of the product. The user manual shall be stored at an easily accessible location.

This user manual contains information concerning:

- Safety instructions
- Installation and operation of the device
- Intended and non-intended use of the device
- Maintenance procedures
- Troubleshooting
- Transport, storage and disposal of the device

Non-observance of the instructions in this user manual may result in serious injuries and damage of property.

©2022 DMT. All rights reserved.

No part of this document may be copied, published or otherwise reproduced without the prior written consent of Highlite International.

Design and product specifications are subject to change without prior notice.

For the latest version of this document or other language versions, please visit our website www.highlite.com or contact us at service@highlite.com.

Highlite International and its authorized service providers are not liable for any injury, damage, direct or indirect loss, consequential or economic loss or any other loss arising from the use of, or inability to use or reliance on the information contained in this document.

Table of contents

1. Introduction 4
1.1. Before Using the Product 4
1.2. Intended Use 4
1.3. Product Lifespan 5
1.4. Text Conventions 5
1.5. Symbols and Signal Words 5
1.6. Symbols on the Information Label 5

2. Safety 6
2.1. Warnings and Safety Instructions 6

3. Description of the Device 8
3.1. Front View 8
3.2. Back View 9
3.3. Product Specifications 10
3.4. Dimensions 12
3.5. Optional Accessories 13
3.5.1. Alpha Series - Single Rigging Bar (incl. curving) 13
3.5.2. Alpha Series - Double Rigging Bar (incl. curving) 13
3.5.3. Stacking Bracket for PS Series 13

4. Installation 14
4.1. Safety Instructions for Installation 14
4.2. Personal Protective Equipment 14
4.3. Installation Site Requirements 14
4.4. Working of the Locking Mechanism 14
4.5. Maximum Number of LED Screens on a Rigging Bar 16
4.6. Mounting Options 17
4.6.1. Mounting the Device to a Rigging Bar 17
4.6.1.1. Hanging Installation 17
4.6.1.2. Standing Installation 21
4.6.2. Mounting the Device to a Truss 23
4.7. Connecting Multiple Devices 24
4.7.1. Vertical Installation 24
4.7.2. Horizontal Installation 26
4.7.3. Curved Installation 28

5. Setup 30
5.1. Warnings and Precautions 30
5.2. Setup Examples 30
5.2.1. Connecting Directly to a Personal Computer 30
5.2.2. Connecting via an Optic Transmitter/Receiver 30
5.3. Connecting Multiple Devices on One Data Link 31
5.4. Connecting to Power Supply 32
5.5. Power Linking of Multiple Devices 33

6. Operation 34
6.1. Safety Instructions for Operation 34
6.2. Control Modes 34

7. Troubleshooting 35

8. Maintenance 36
8.1. Safety Instructions for Maintenance 36
8.2. Preventive Maintenance 36
8.2.1. Basic Cleaning Instructions 36
8.3. Corrective Maintenance 36
8.4. Replacing a LED Screen Module 37

8.5. LED Screen Module Calibration 38
8.5.1. Manual Calibration 38
8.5.2. Digital Calibration 38
8.5.3. LED Indicator Status 38
8.6. Replacing the Control Box 39
9. Deinstallation, Transportation and Storage 40
9.1. Instructions for Deinstallation 40
9.2. Instructions for Transportation 40
9.3. Storage 40
10. Disposal 40
11. Approval 40

1. Introduction

1.1. Before Using the Product

Important
Read and follow the instructions in this user manual before installing, operating or servicing this product.

The manufacturer will not accept liability for any resulting damages caused by the non-observance of this manual.

After unpacking, check the contents of the box. If any parts are missing or damaged, contact your Highlite International dealer.

Your shipment includes:

- Alpha Series A3.9i
- Horizontal Power link Power Pro cable (0,7 m)
- Horizontal Signal link ProCat cable (0,7 m)
- User manual

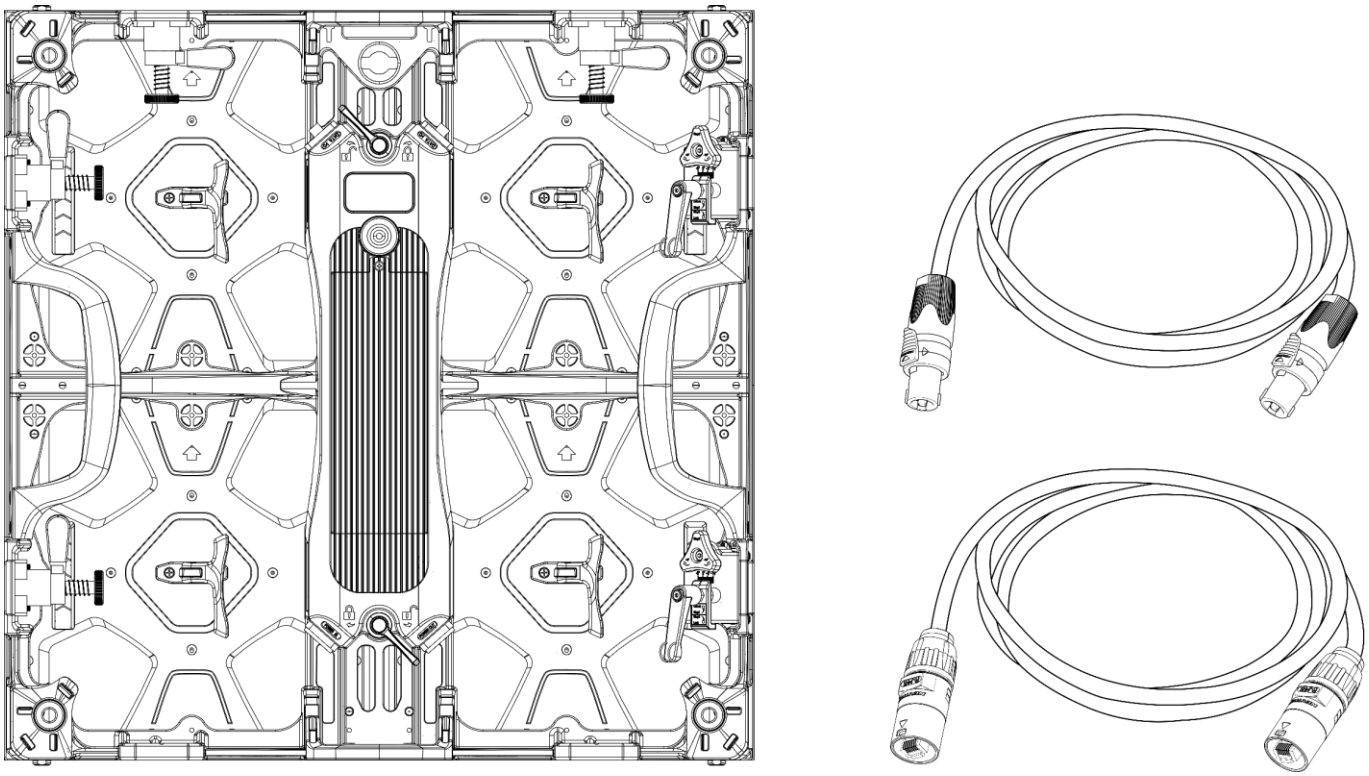

Fig. 01

1.2. Intended Use

This device is intended for professional use as a LED screen module to be integrated as a partial image area of a larger display screen area. This device is not intended for use as a standalone display. It is suitable only for indoor installation. This device is not suitable for households.

Any other use, not mentioned under intended use, is regarded as non-intended and incorrect use.

1.3. Product Lifespan

This device is not designed for permanent operation. Disconnect the device from the electrical power supply when the device is not in operation. This will reduce the wear and will improve the device's lifespan.

1.4. Text Conventions

Throughout the user manual the following text conventions are used:

- Buttons: All buttons are in bold lettering, for example "Press the **UP/DOWN** buttons"
- References: References to chapters and parts of the device are in bold lettering, for example: "Refer to **2. Safety**", "turn the **adjustment screw (02)**"
- 0–255: Defines a range of values
- Notes: **Note:** (in bold lettering) is followed by useful information or tips

1.5. Symbols and Signal Words

Safety notes and warnings are indicated throughout the user manual by safety signs.

Always follow the instructions provided in this user manual.

DANGER Indicates an imminently hazardous situation which, if not avoided, will result in death or serious injury.

WARNING Indicates a potentially hazardous situation which, if not avoided, could result in death or serious injury.

CAUTION Indicates a potentially hazardous situation, which, if not avoided, may result in minor or moderate injury.

Attention Indicates important information for the correct operation and use of the product.

Important Read and observe the instructions in this document.

Provides important information about the disposal of this product.

1.6. Symbols on the Information Label

This product is provided with an information label. The information label is located on the bottom plate of the device.

The information label contains the following symbols:

This device is designed for indoor use.

This device falls under IEC protection class I.

This device shall not be treated as household waste.

Read and observe the instructions in this document.

2. Safety

Important
Read and follow the instructions in this user manual before installing, operating or servicing this product.

The manufacturer will not accept liability for any resulting damages caused by the non-observance of this manual.

2.1. Warnings and Safety Instructions

DANGER
Electric shock caused by dangerous voltage inside

There are areas within the device where dangerous touch voltage may be present.

- Do not open the device or remove any covers.
- Do not operate the device if the covers or the housing are open. Before operation, check if the housing is firmly closed and all screws are tightly fastened.
- Disconnect the device from electrical power supply before service and maintenance, and when the device is not in use.

DANGER
Electric shock caused by short-circuit

This device falls under IEC protection class I.

- Make sure that the device is electrically connected to ground (earth). Connect the device only to a socket-outlet with ground (earth) connection.
- Do not cover the ground (earth) connection.
- Do not bypass the thermostatic switch or fuses.
- Do not let the power cable come into contact with other cables. Handle the power cable and all connections with the mains with caution.
- Do not modify, bend, mechanically strain, put pressure on, pull or heat up the power cable.
- Make sure that the power cable is not crimped or damaged. Examine the power cable periodically for any defects.
- Do not immerse the device in water or other liquids. Do not install the device in a location where flooding may occur.
- Do not use the device during thunderstorms. Disconnect the device from the electrical power supply immediately.

Attention
Power supply

- Before connecting the device to the power supply, make sure that the current, voltage and frequency match the input voltage, current and frequency specified on the information label on the device.
- Make sure that the cross-sectional area of the extension cords and power cables is sufficient for the required power consumption of the device.

Attention
General safety

- Do not switch the device on and off in short intervals. This decreases the device's life.
- Do not shake the device. Avoid brute force when installing or operating the device.
- If the device is dropped or struck, disconnect the device from the electrical power supply immediately.
- If the device is exposed to extreme temperature variations (e.g. after transportation), do not switch it on immediately. Let the device reach room temperature before switching it on, otherwise it may be damaged by the formed condensation.
- If the device fails to work properly, discontinue the use immediately.

Attention
For professional use only
This device shall be used only for the purposes it is designed for.

This device is designed to be used as a LED screen module to be integrated as a partial image area of a larger display screen area. This device is not intended for use as a standalone display. Any incorrect use may lead to hazardous situations and result in injuries and material damage.

- This device is not suitable for households.
- This device is not designed for permanent operation.
- This device does not contain user-serviceable parts. Unauthorized modifications to the device will render the warranty void. Such modifications may result in injuries and material damage.

Attention
Before use, examine the device visually for any defects.

Make sure that:

- There are no deformations on housings, fixations and installation points.
- The power cables are not damaged and do not show any material fatigue.

Attention
Do not expose the device to conditions that exceed the rated IP class conditions.

This device is IP20 rated. IP (Ingress Protection) 20 class provides protection against solid objects greater than 12 mm, such as fingers, and no protection against harmful ingress of water.

3. Description of the Device

The Alpha Series A3.9i is an indoor HD LED screen with a pixel pitch of 3.9 mm and a built-in A5s PLUS receiver card. The device allows angled connections between -5° and +10°.

Two types of rigging bars(101820 + 101821) are available for standing or hanging installation. With the Stacking Bracket (101743), you can mount the device to a truss construction.

3.1. Front View

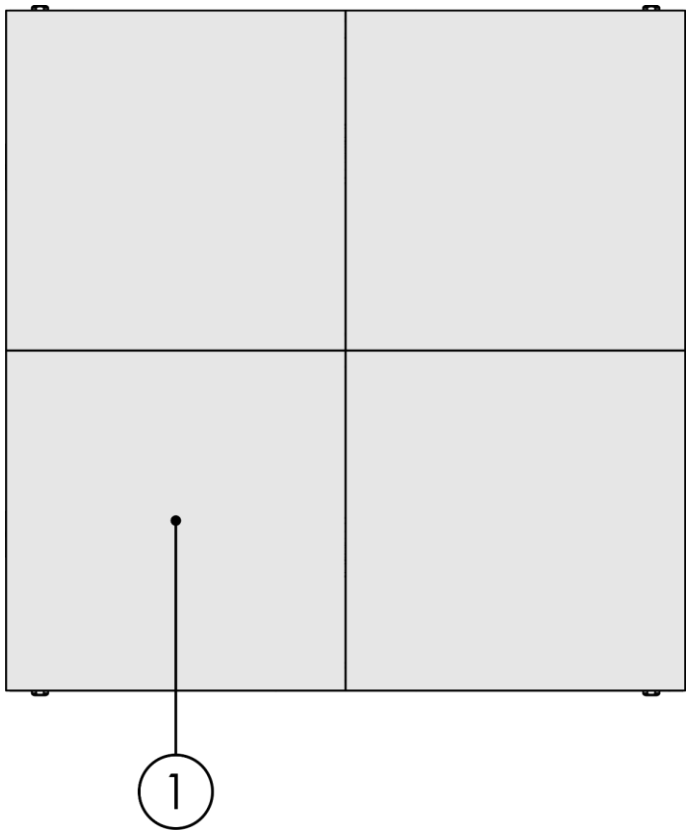

Fig. 02

01) 4x LED screen module

3.2. Back View

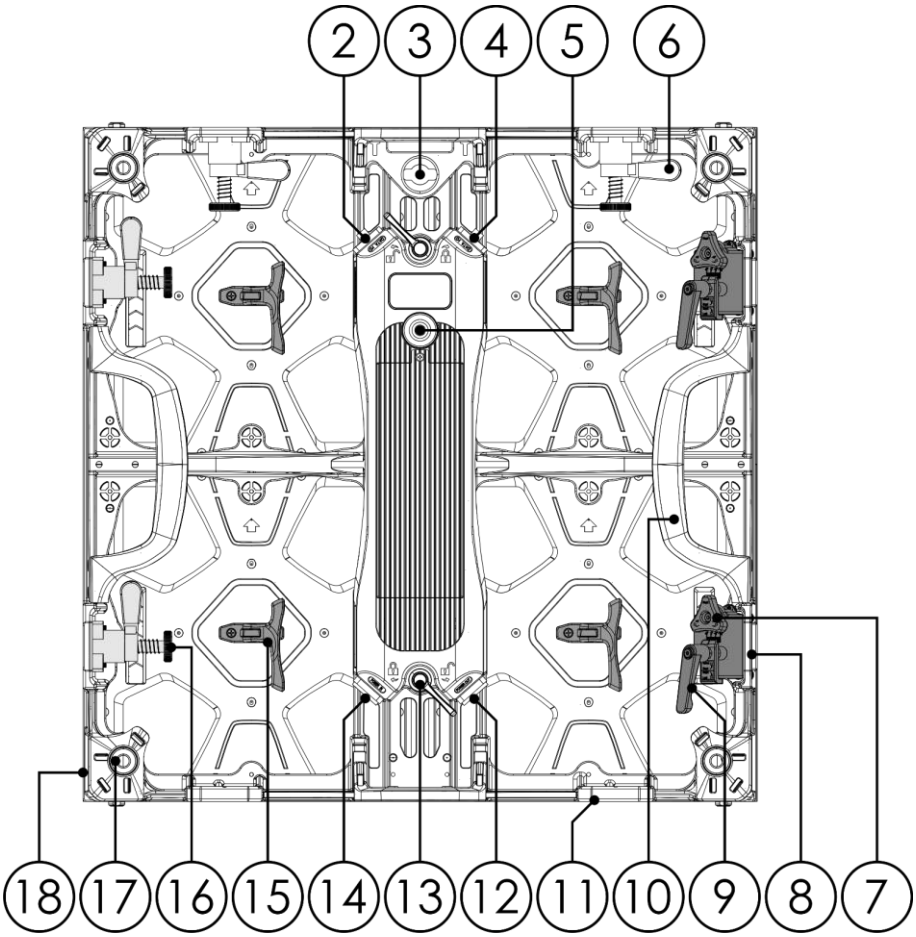

Fig. 03

02) Data In/Out connector (ProCat)
03) Mounting opening (for stacking bracket 101743)
04) Data In/Out connector (ProCat)
05) Test button (with LED indicator)
06) 2x locking mechanism (for vertically connecting of a rigging bar/led screen)
07) 2x triangular screw
08) 2x inclination mechanism (with fast-lock opening)
09) 2x locking handle
10) 2x carrying handle
11) 2x fast-lock opening (for connecting an Alpha series 3.9i LED screen, hanging installation or rigging bar, standing installation)
12) Power Out
13) 2x locking lever (for control box)
14) Power In
15) 4x service handle (for module replacement)
16) 2x locking mechanism (for horizontally connecting of a led screen)
17) 4x M10 mounting opening
18) Cabinet frame

3.3. Product Specifications

Model:	Alpha Series A3.9i

Electrical:	
Input voltage:	100–240 V AC, 50/60 Hz
Power consumption:	150 W
Power consumption average:	50 W

Mechanical Specifications:	
Cabinet dimensions:	500 x 500 x 77 mm (L x W x H)
Cabinet weight:	6 kg
Module dimensions:	250 x 250 mm (L x W)
Curved installation angles:	-5°, 0°, 5°, 10°
IP rating:	IP20
Housing:	Aluminum die-cast

Source:	
Light source type:	LED
LED type:	Black Frame
Brightness:	1500 nits

Optical:	
Pixel pitch horizontal:	3,91 mm
Pixel pitch vertical:	3,91 mm
Cabinet resolution width:	128 px
Cabinet resolution height:	128 px
Module resolution width:	64 px
Module resolution height:	64 px
Viewing angle horizontal:	160°
Viewing angle vertical:	160°
Minimum viewing distance:	4 m
Contrast ratio:	5000:1
Cabinet ratio:	1:1
Transparency:	0 %

Control and Programming:	
Control system:	NovaStar
Receiving card:	A5s PLUS
Refresh rate screen:	3840 Hz

Product Properties:	
Cooling:	Convection
Maintenance:	Front / Rear

Rigging:	
Fixed mounting option:	M10
Rigging vertical max.:	18 panels
Locking system:	Fast Lock System

Connections:	
Power connector in:	Power Pro Blue
Power connector out:	Power Pro Gray
Data connector in:	ProCat
Data connector out:	ProCat

Construction:	
Housing:	Metal and flame-retardant plastic
Color:	Black
IP rating:	IP20
Cooling:	Axial fan

Thermal:	
Minimum ambient temperature t_a:	-10 °C
Maximum ambient temperature t_a:	45 °C
Operating humidity:	10–90 % RH

3.4. Dimensions

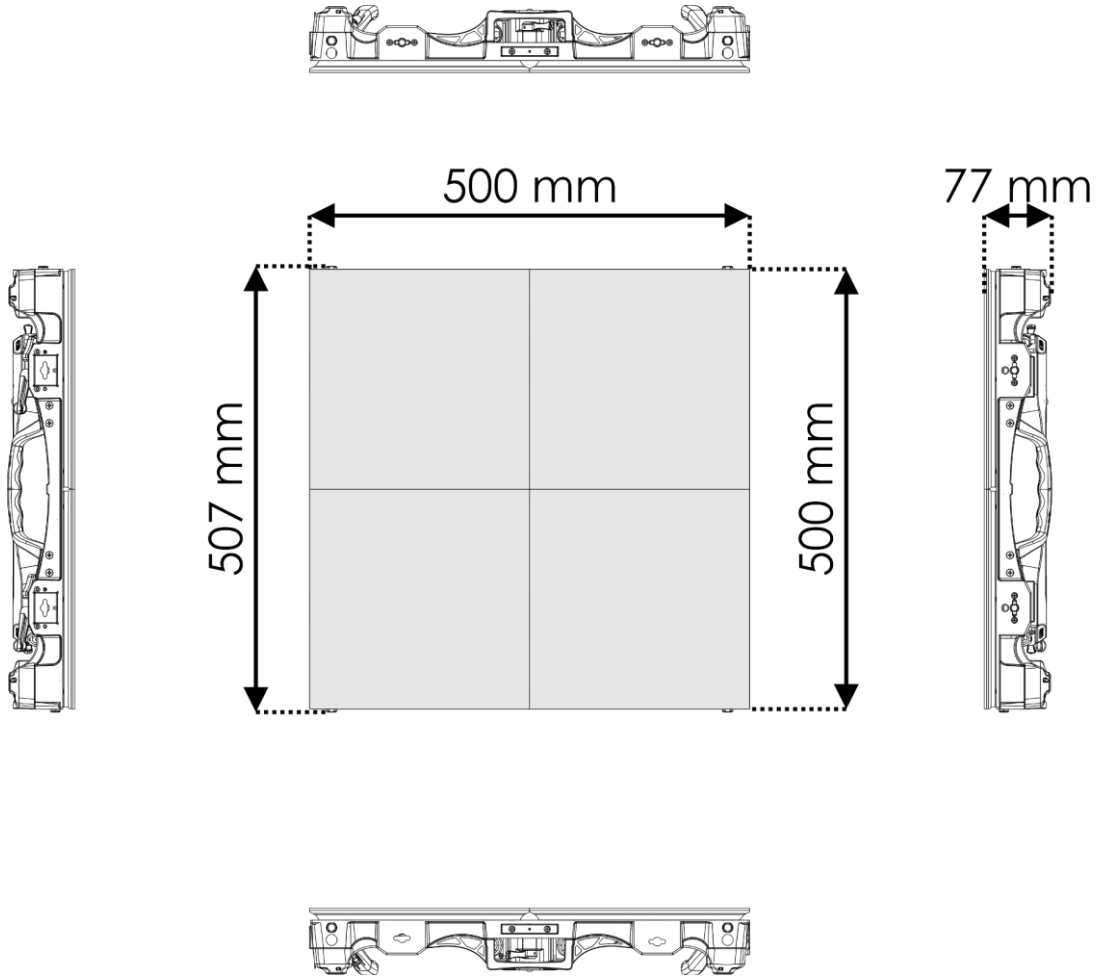

Fig. 04

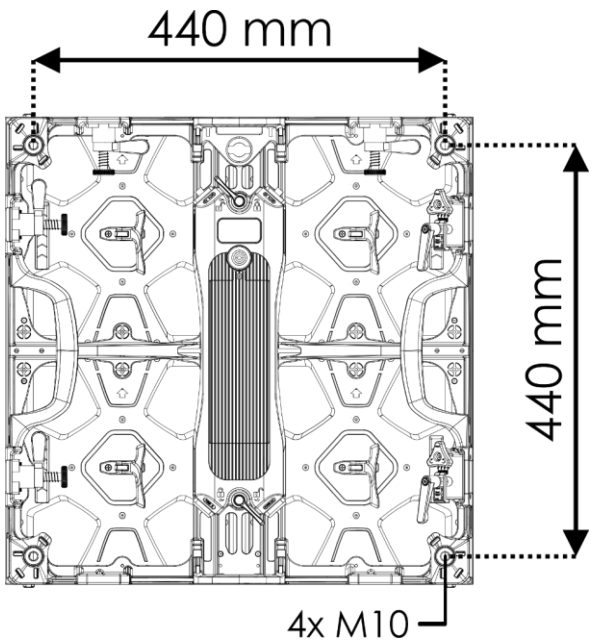

Fig. 05

3.5. Optional Accessories

You can additionally purchase the following accessories:

101820 (Alpha Series - Single Rigging Bar incl. curving)
101821 (Alpha Series - Double Rigging Bar incl. curving)
101743 (Stacking Bracket for PS Series)

3.5.1. Alpha Series - Single Rigging Bar (incl. curving)

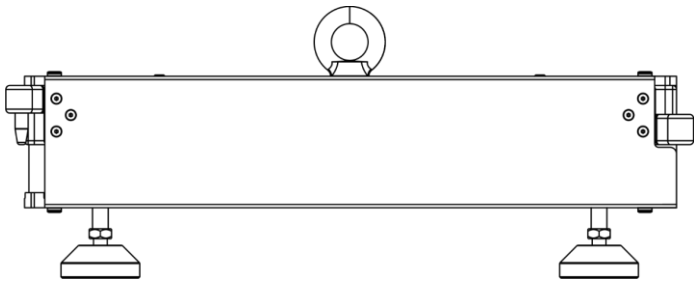

Fig. 06

3.5.2. Alpha Series - Double Rigging Bar (incl. curving)

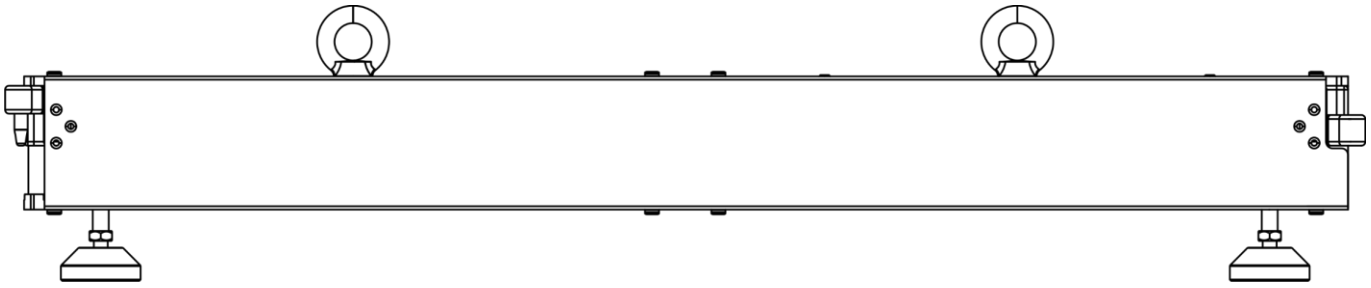

Fig. 07

3.5.3. Stacking Bracket for PS Series

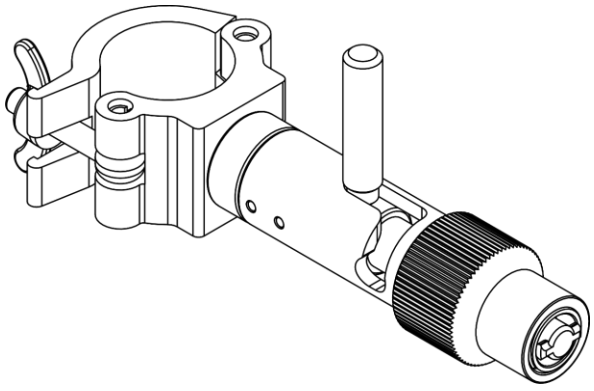

Fig. 08

4. Installation

4.1. Safety Instructions for Installation

WARNING
Incorrect installation can cause serious injuries and damage of property.

Installation must be carried out only by instructed persons.

Follow all applicable European, national and local safety regulations concerning rigging and trussing.

Minimum two persons are necessary to install the device.

4.2. Personal Protective Equipment

During installation and rigging wear personal protective equipment in compliance with the national and site-specific regulations.

4.3. Installation Site Requirements

- The device must be installed only indoors.
- The device can be positioned on a flat surface.
- The maximum ambient temperature t_a = 45 °C must never be exceeded.
- The relative humidity must not exceed 90 % with an ambient temperature of 45 °C.

4.4. Working of the Locking Mechanism

the Alpha series 3.9i LED screen has 4 locking mechanisms: 2 on the top section and 2 on the left side.

The Single Rigging Bar (101820) has 2 locking mechanisms and the Double Rigging Bar (101821) has 4 locking mechanisms.

The **locking mechanisms (06/16)** allow you to easily connect a LED screen to a rigging bar, a rigging bar to a LED screen and a LED screen to another LED screen.

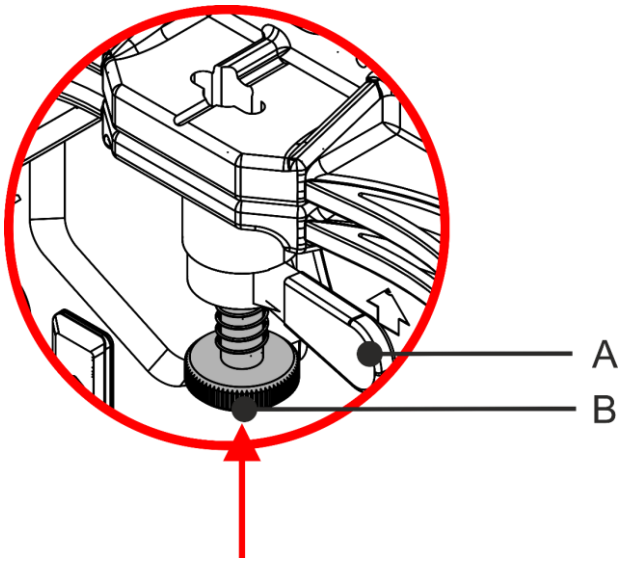

Fig. 09

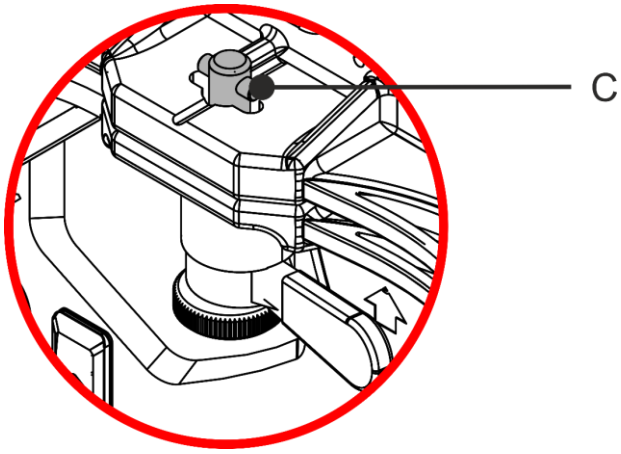

Fig. 10

A) Lever
B) Spring-loaded fast-lock
C) Pins

To use the locking mechanism, follow the steps below:

01) Turn the **lever (A)** counterclockwise.
02) Push the **spring-loaded fast-lock (B)** and turn it by 90° clockwise or counterclockwise, as shown in Fig. 09 and 10.
03) Make sure that the **pins (C)** are firmly locked in the **fast-lock opening (11)**, as shown in Fig. 11.
04) Turn the **lever (A)** clockwise to lock the **locking mechanism (06/16)**, as shown in Fig. 12 and 13.

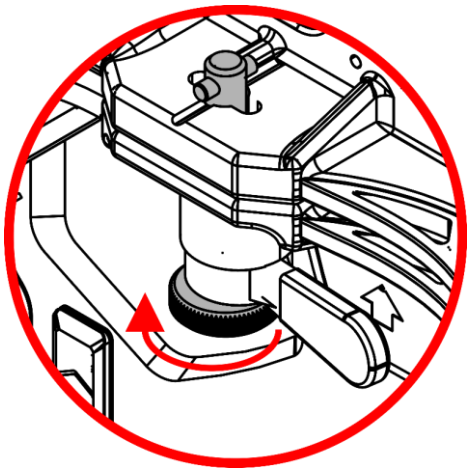

Fig. 11

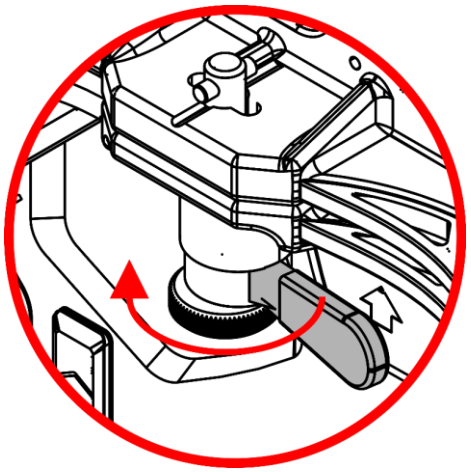

Fig. 12

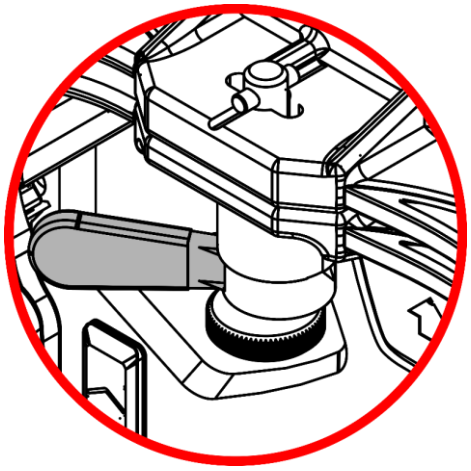

Fig. 13

4.5. Maximum Number of LED Screens on a Rigging Bar

WARNING
Do not hang more devices than the maximum allowed number on one rigging bar.

The Alpha Series A3.9i LED screen shall be used only with the Single Rigging Bar/ Double Rigging Bar (101820/101821).

Do not exceed the maximum allowed Working Load Limit of the rigging bar.

The WLL (Working Load Limit) for the Single Rigging Bar (101820) is 200 kg.

The WLL (Working Load Limit) for the Double Rigging Bar (101821) is 400 kg.

The rigging bars are designed for hanging installation of 18 LED screens under each other. Do not hang more than 18 LED screens under each other on one rigging bar.

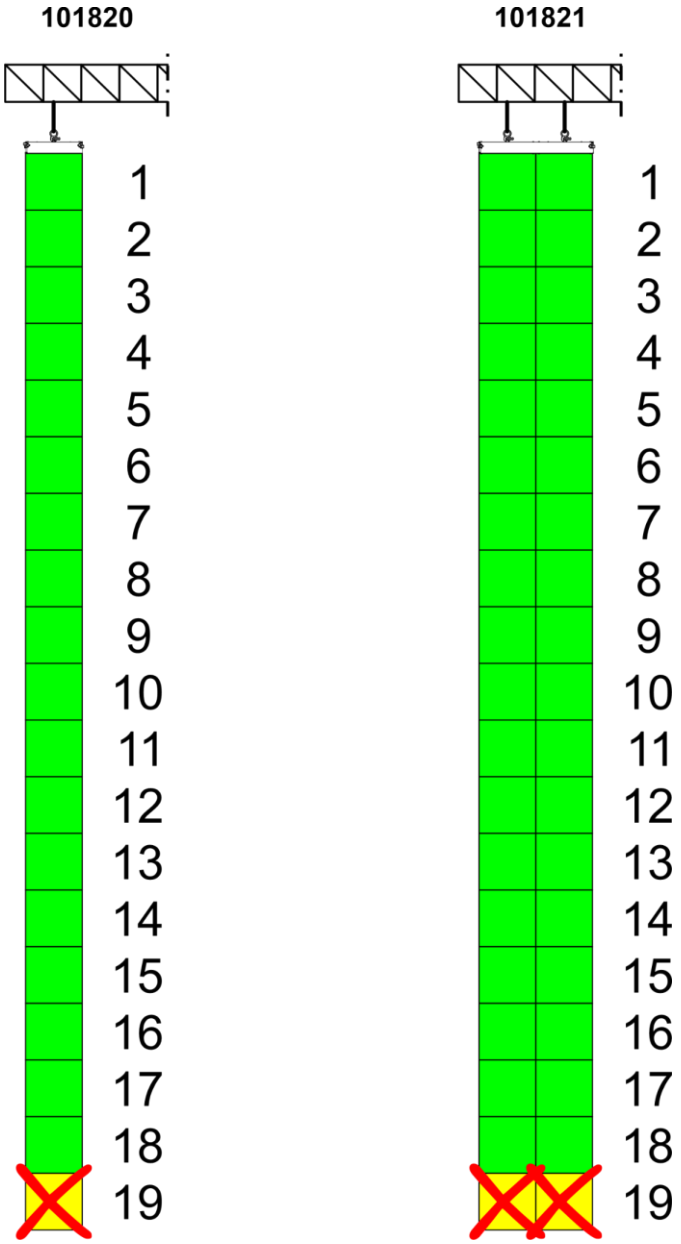

Fig. 14

4.6. Mounting Options

CAUTION
Restrict the access under the work area during rigging and/or derigging.

You can mount the device in 2 different ways:

- to a rigging bar (LED screen below a rigging bar/ LED screen on top of a rigging bar)
- to a truss

4.6.1. Mounting the Device to a Rigging Bar

4.6.1.1. Hanging Installation

By the hanging installation, the device is installed below a rigging bar.

WARNING
Do not hang more devices than the maximum allowed number on one rigging bar.

The rigging bars are designed for hanging installation of 18 LED screens under each other. Do not hang more than 18 LED screens under each other on one rigging bar.

WARNING
Do not mount the device to a rigging bar only by the magnet.

The LED screen and the rigging bar have magnetic strips. The magnetic strips are designed to help you align the device to a rigging bar during installation.

- Make sure that the device is always held until installation is completed.
- Do not let the device hang on a rigging bar only by the magnet.

Before you start the installation of the LED screens, make sure that the rigging bar setup is leveled, as shown in Fig. 15 and 16. For more information about leveling, see the user manual of the Single Rigging Bar/ Double Rigging Bar (101820/101821) (101820/101821).

101820

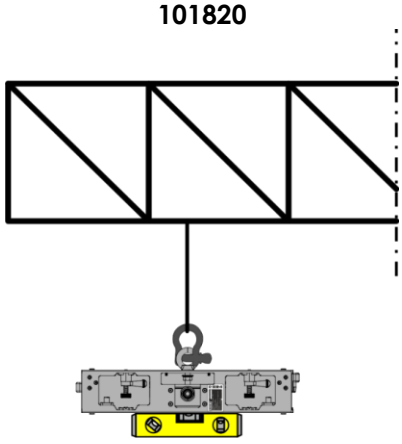

Fig. 15

101821

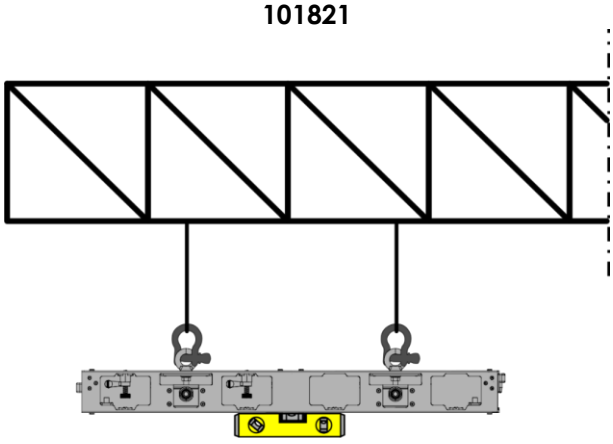

Fig. 16

101820

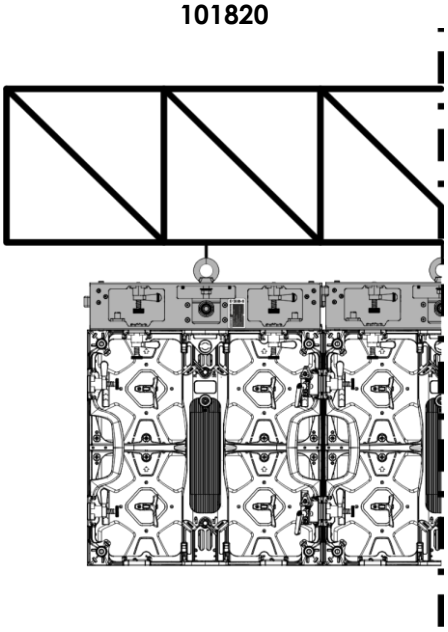

Fig. 17

101821

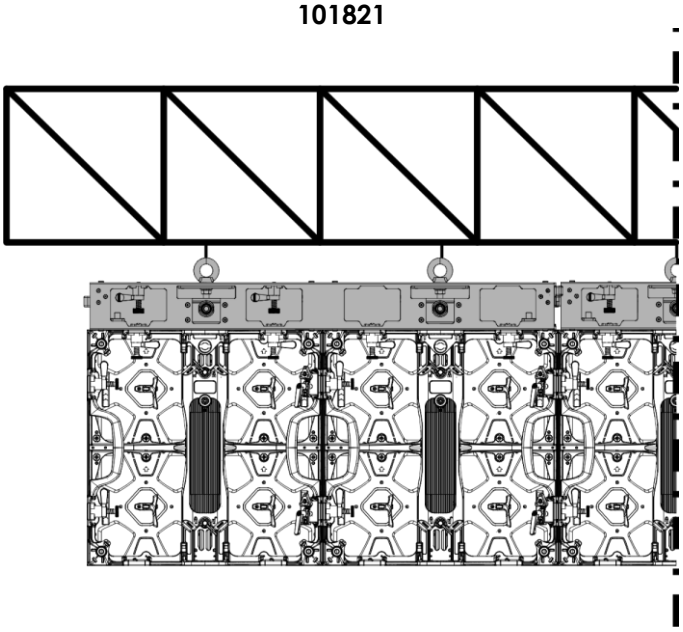

Fig. 18

To connect the Alpha series 3.9i LED screen to a rigging bar, follow the steps below:

01) Put the LED screen below the rigging bar and let the magnetic strip on top of the LED screen snap to the bottom of the rigging bar, as shown in Fig. 19.
02) Turn **lever (A)** of the left **locking mechanism (06)** counterclockwise.
03) Push the **spring-loaded fast-lock (B)** of the left **locking mechanism (06)** upwards and turn it by 90° clockwise or counterclockwise, as shown in Fig. 20 and 21.

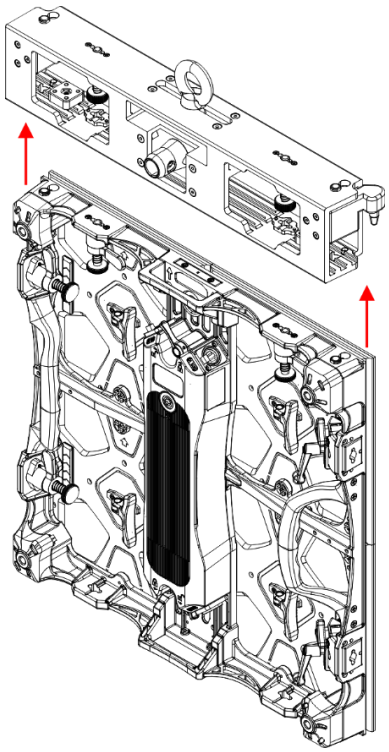

Fig. 19

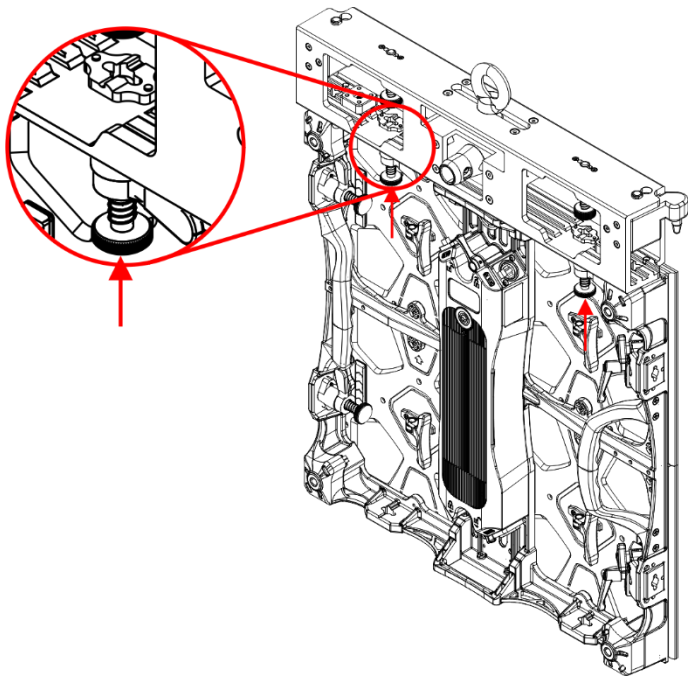

Fig. 20

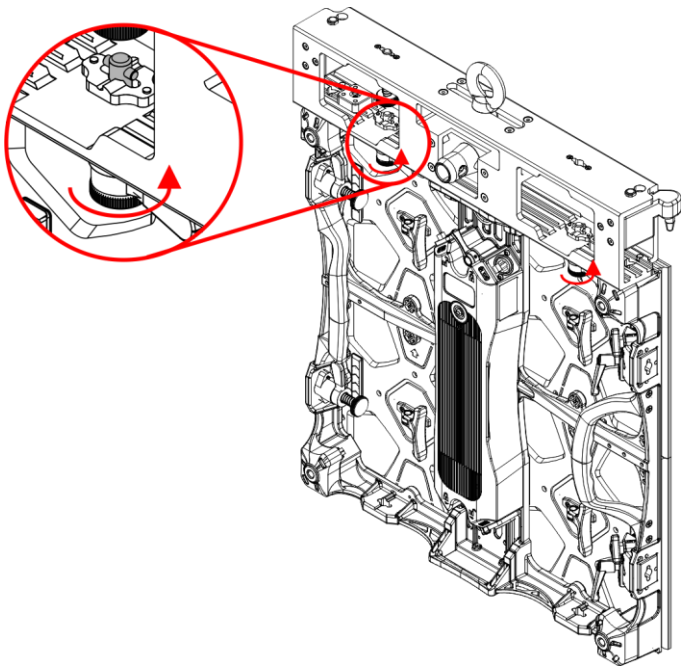

Fig. 21

04) Make sure that the **pins (C)** of the left **locking mechanism (06)** are firmly locked in the fast-lock opening on the bottom of the rigging bar, as shown in Fig. 22.
05) Turn **lever (A)** of the left **locking mechanism (06)** clockwise to tighten the device to the rigging bar, as shown in Fig. 23 and 24.
06) Repeat steps 2–5 for the right **locking mechanism (06)**.

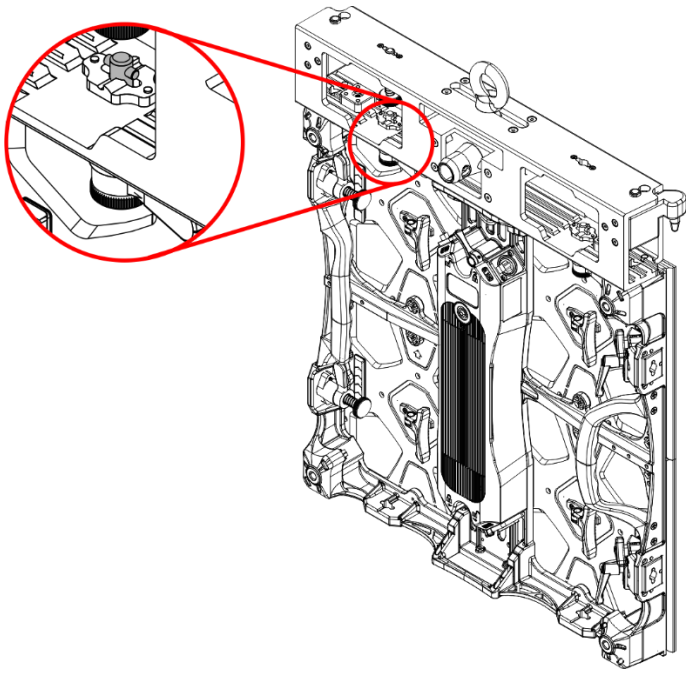

Fig. 22

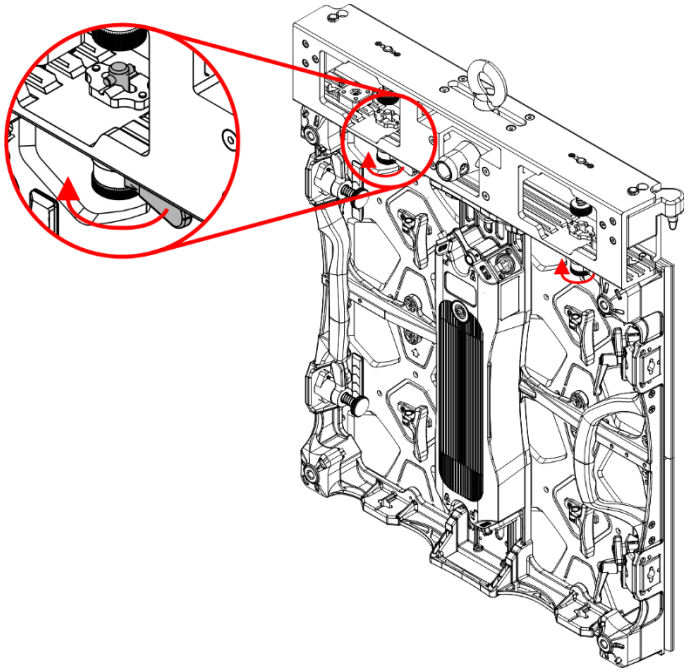

Fig. 23

07) Make sure that the setup is leveled, as shown in Fig. 25. To level the setup, see Fig. 15 and 16 on page 17.

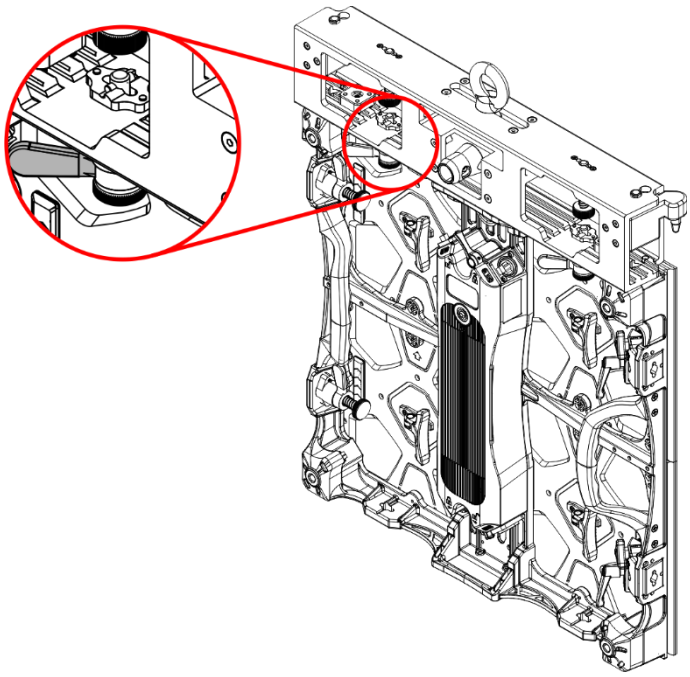

Fig. 24

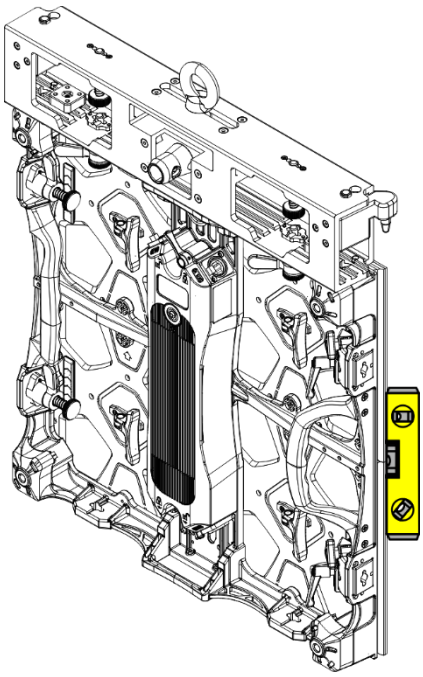

Fig. 25

4.6.1.2. Standing Installation

By the standing installation, the device is installed on top of a rigging bar.

To install the LED screen to a standing rigging bar, follow the steps below:

01) Remove the rigging eye(s) from the top of a rigging bar, as shown in Fig. 26.

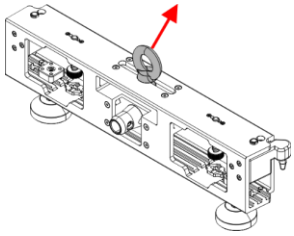

Fig. 26

02) Put the LED screen on top of the rigging bar, so that the **fast-lock openings (11)** on the bottom of the LED screen fit in the fast-locks of the rigging bar, as shown in Fig. 27 and 28.

101820

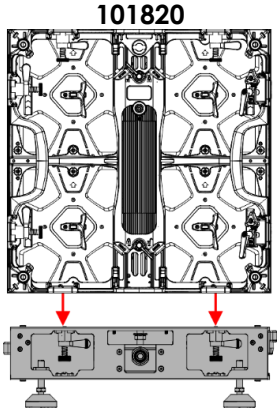

Fig. 27

101821

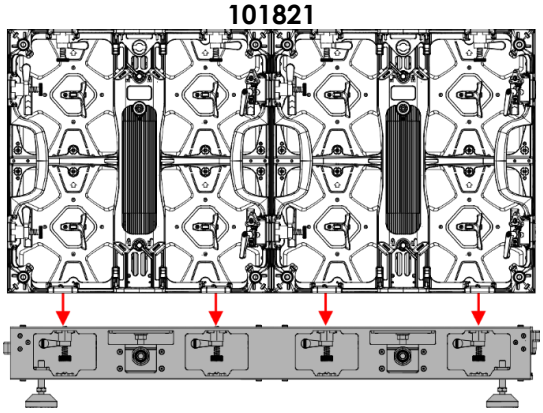

Fig. 28

03) Turn **lever (A)** of the left **locking mechanism (06)** counterclockwise.
04) Push the **spring-loaded fast-lock (B)** of the left **locking mechanism (06)** on the rigging bar upwards and turn it by 90°, as shown in Fig. 29 and 30.

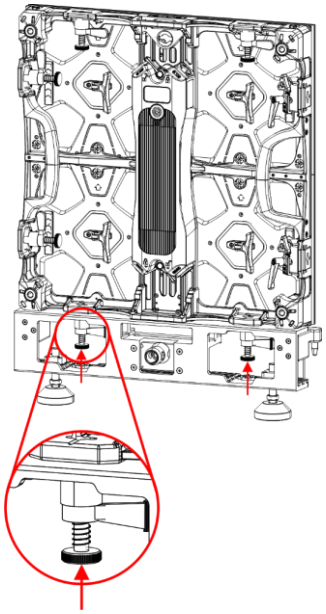

Fig. 29

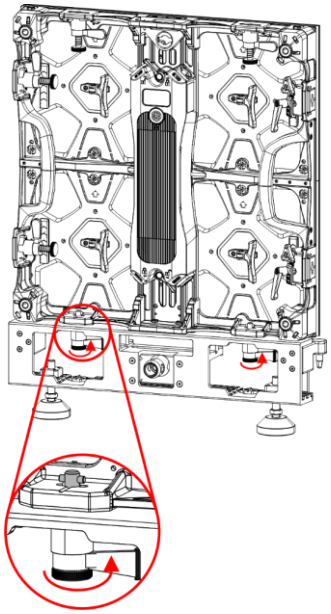

Fig. 30

05) Make sure that the **pins (C)** of the left **locking mechanism (06)** on the rigging bar are firmly locked in the **fast-lock opening (11)** on the bottom of the LED screen as shown in Fig. 31.
06) Turn **lever (A)** of the left **locking mechanism (06)** on the rigging bar clockwise to tighten the rigging bar to the LED screen, as shown in Fig. 32 and 33.
07) Repeat steps 3–5 for the right **locking mechanism (06)** of the rigging bar.

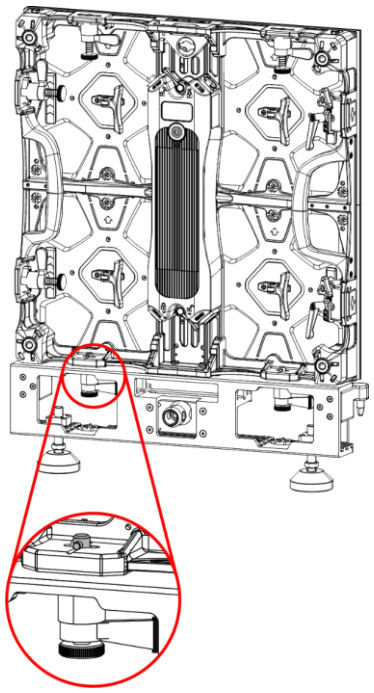

Fig. 31

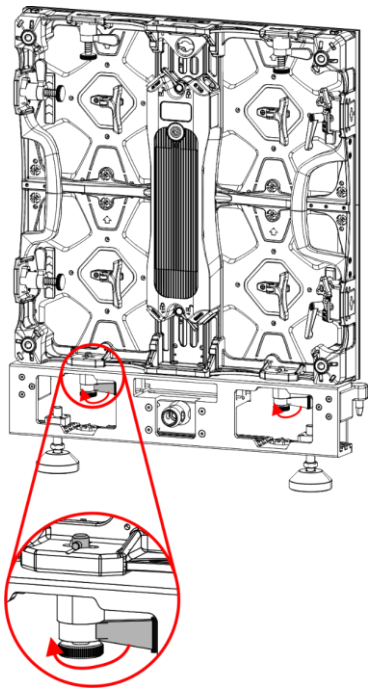

Fig. 32

08) Make sure that the LED screen is leveled, as shown in Fig. 34. For more information about leveling the setup, see the user manual of the rigging bar (101820/101821).

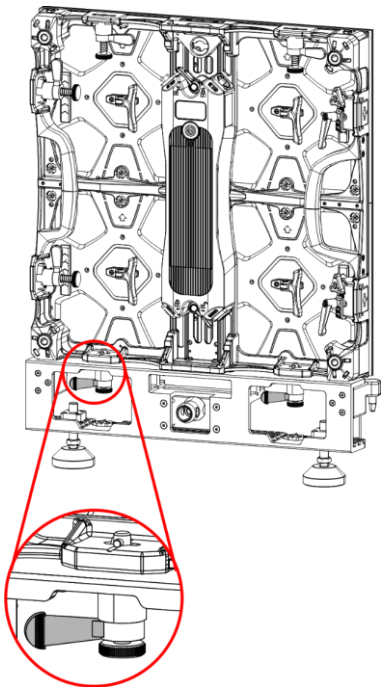

Fig. 33

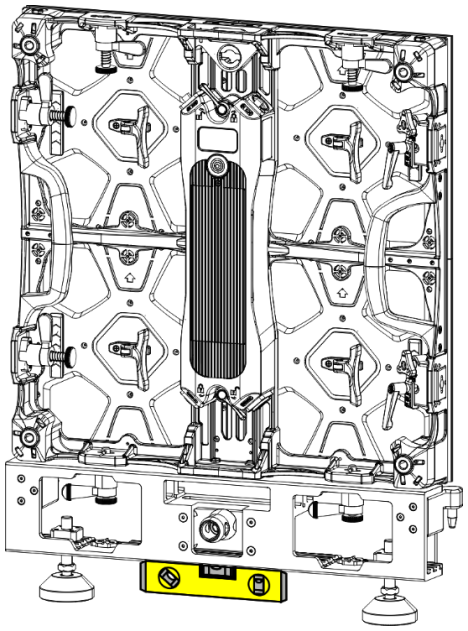

Fig. 34

4.6.2. Mounting the Device to a Truss

You can connect the device laterally to a truss.

To mount the device to a truss you need the following item:

1x stacking bracket (product code: 101743) For more information see **3.5. Optional Accessories**.

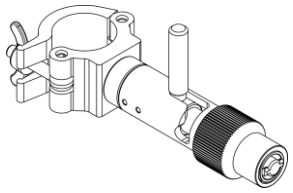

Fig. 35

01) Put the stacking bracket in front of the **mounting opening (03)**.
02) Press the lever of the stacking bracket forwards and then to the right, as shown in Fig. 36. The top of the stacking bracket locks into the **mounting opening (03)**.
03) To level the LED screen, turn the front of the stacking bracket clockwise, as shown in Fig. 37.

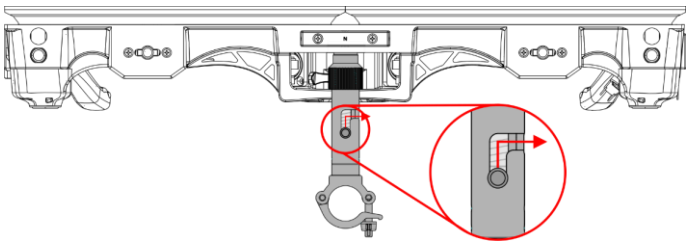

Fig. 36

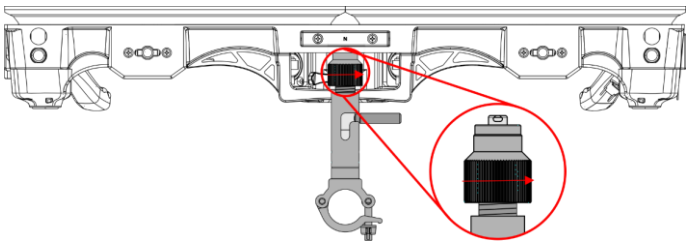

Fig. 37

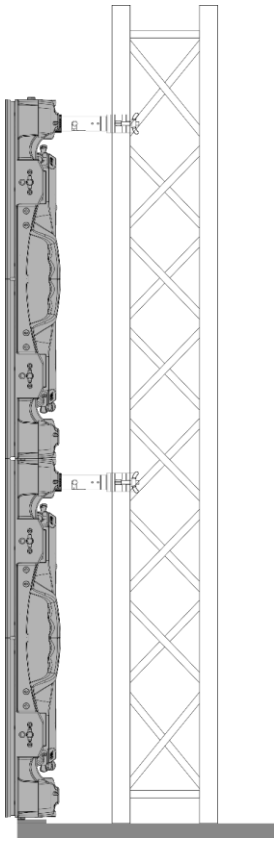

Fig. 38

4.7. Connecting Multiple Devices

To create a setup with multiple devices, you need to connect the devices vertically and horizontally.

4.7.1. Vertical Installation

By the vertical installation, 2 LED screens are connected below one another.

To connect vertically 2 LED screens, follow the steps below:

01) Put another screen below the first screen and let the magnetic top of the second screen snap to the bottom of the first screen, as shown in Fig. 39.
02) Turn **lever (A)** of the left **locking mechanism (06)** counterclockwise.
03) Push the left **spring-loaded fast-lock (B)** of the left **locking mechanism (06)** of the LED screen upwards and turn it by 90° clockwise or counterclockwise, as shown in Fig. 40 and 41.

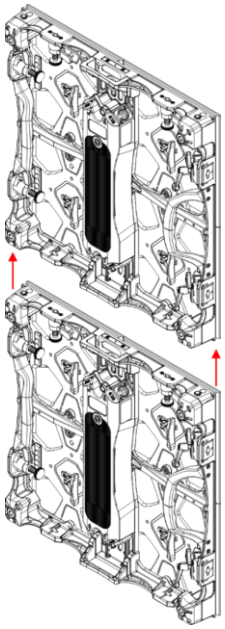

Fig. 39

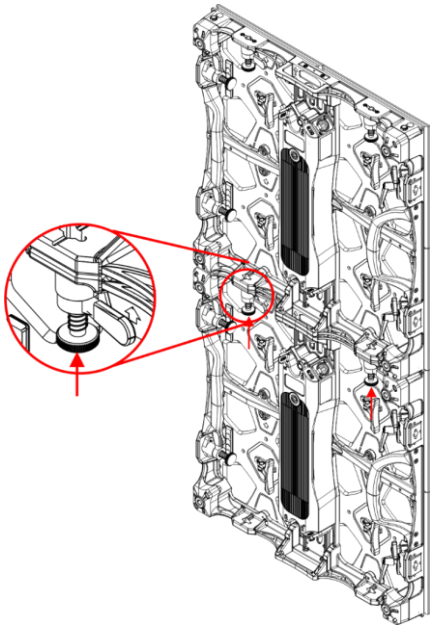

Fig. 40

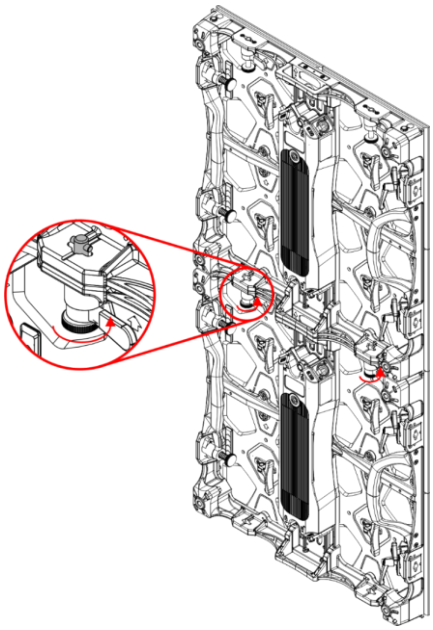

Fig. 41

04) Make sure that the **pins (C)** of the left **locking mechanism (06)** are firmly locked in the **fast-lock opening (11)** on the bottom of the device, as shown in Fig. 42.
05) Turn **lever (A)** of the left **locking mechanism (06)** clockwise to tighten the lower LED screen to the upper LED screen, as shown in Fig. 43 and 44.
06) Repeat steps 2–5 for the right **locking mechanism (06)** on the bottom LED screen.

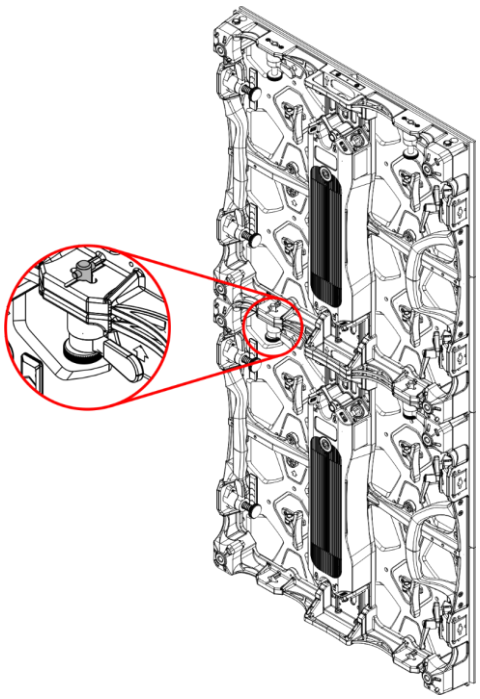

Fig. 42

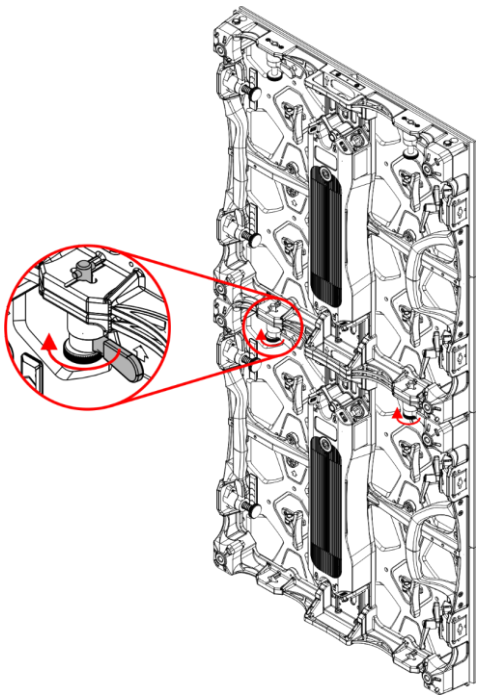

Fig. 43

07) Make sure that the LED screen is secured and leveled before you continue with the installation, as shown in Fig. 45. To level the setup, see Fig. 15 and 16 on page 17.
08) If you want to add more LED screens to other LED screens in the setup, repeat steps 2–6.

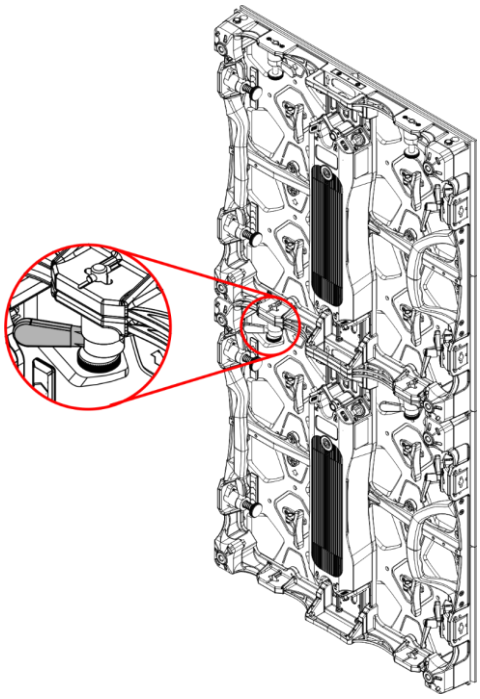

Fig. 44

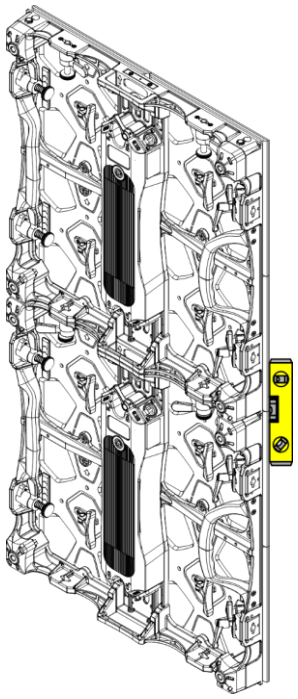

Fig. 45

4.7.2. Horizontal Installation

By the horizontal installation, 2 LED screens are connected next to one another.

To connect horizontally 2 LED screens, follow the steps below:

01) Turn **lever (A)** of the top **locking mechanism (16)** counterclockwise.
02) Push the **spring-loaded fast-lock (B)** of the top **locking mechanism (16)** of the second LED screen and turn it by 90° clockwise or counterclockwise, as shown in Fig. 46 and 47.

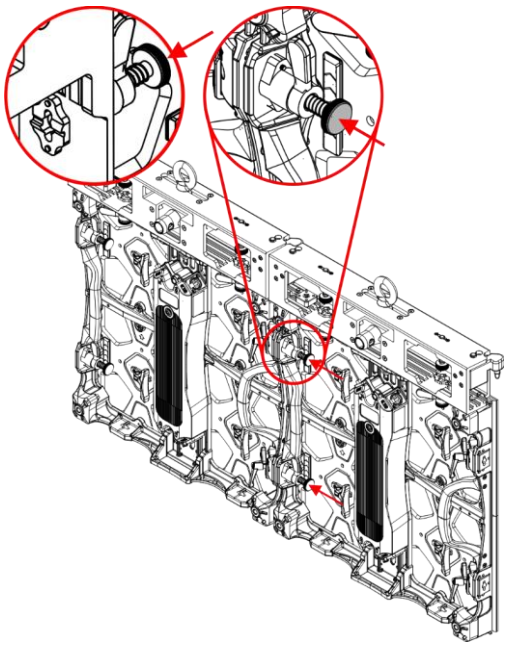

Fig. 46

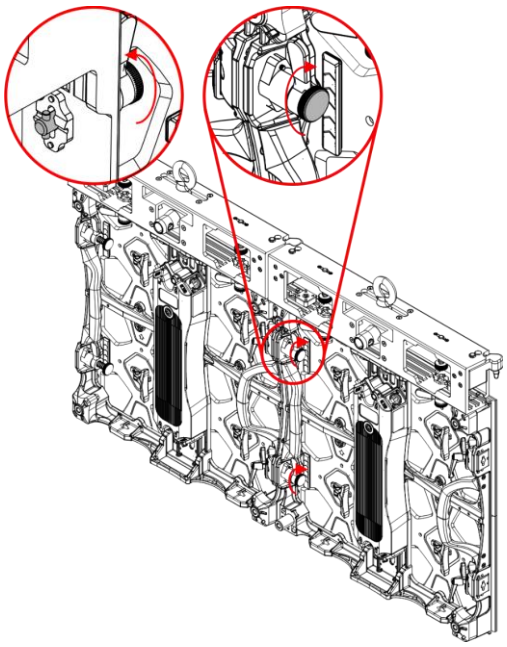

Fig. 47

03) Make sure that the **pins (C)** of the top **locking mechanism (16)** are firmly locked in the **fast-lock opening (11)** of the previous LED screen, as shown in Fig. 48.
04) Turn **lever (A)** of the top **locking mechanism (16)** clockwise to tighten the LED screen to the previous LED screen, as shown in Fig. 49 and 50.
05) Repeat steps 1–4 for the bottom **locking mechanism (16)** of the LED screen.

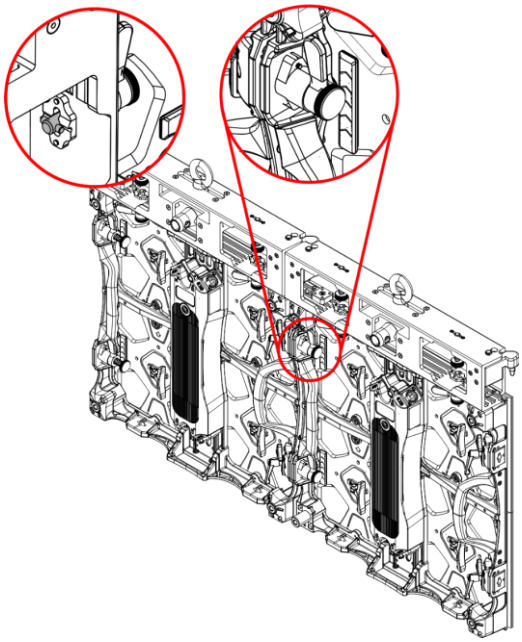

Fig. 48

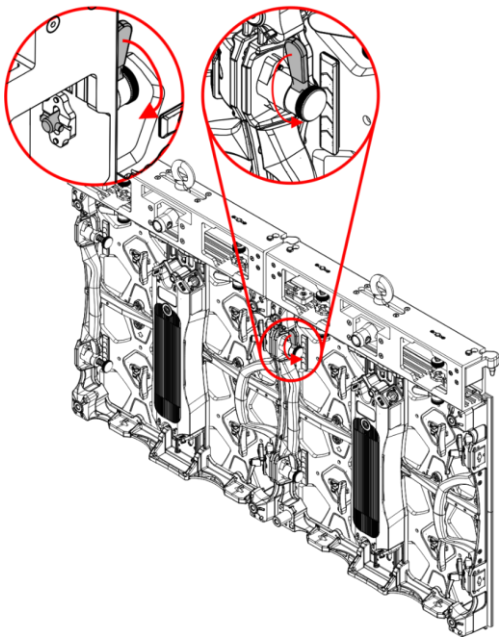

Fig. 49

06) Make sure that the LED screen is leveled before you continue with the installation. For more information see Fig. 15 and 16 on page 17.
07) If you want to add more LED screens to other rigging bars in the setup, repeat steps 1–5.

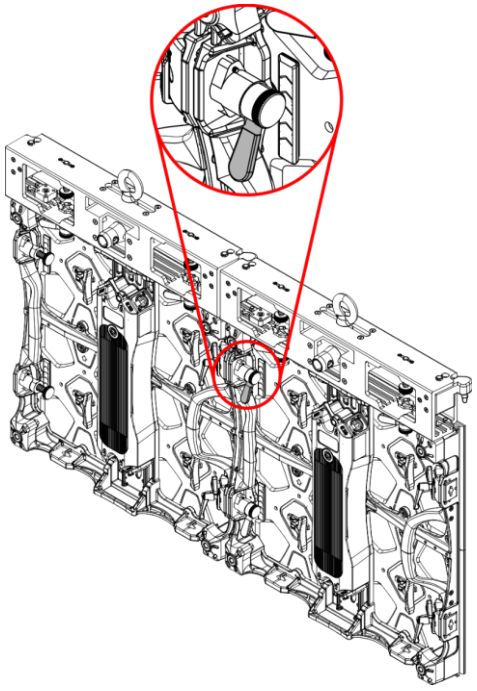

Fig. 50

4.7.3. Curved Installation

You can create a curved setup with multiple devices. The Alpha series 3.9i LED screen can be placed in a curved setup at -5°, 5°, and 10° angle. For more information about curved installation of the rigging bar, see the user manual of the Single Rigging Bar/ Double Rigging Bar (101820/101821).

To create a curved setup of multiple LED screens, follow the steps below:

01) Turn the top vertical **locking handle (09)** 360° counterclockwise to unlock the inclination mechanism, as shown in Fig. 51.
02) Turn the top **triangular screw (07)** counterclockwise to set the angle, as shown in Fig. 52–53. There are 4 options available: -5°, 0°, 5°, 10°, as shown in Fig. 55–58.
03) Turn the top vertical **locking handle (09)** 360° clockwise to lock the **inclination mechanism (08)**, as shown in Fig. 54.
04) Repeat steps 1–4 for the bottom **locking handle (09)** of the LED screen.

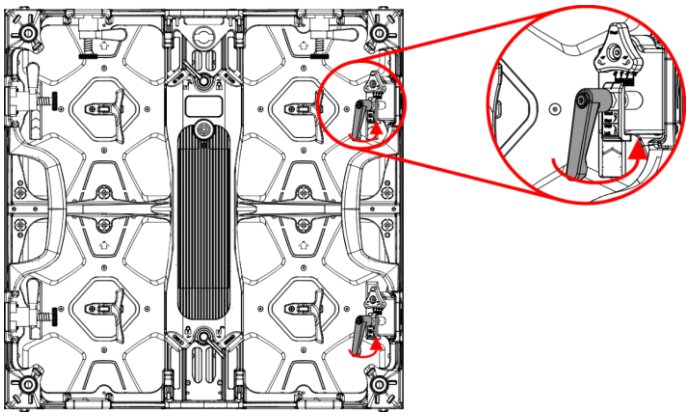

Fig. 51

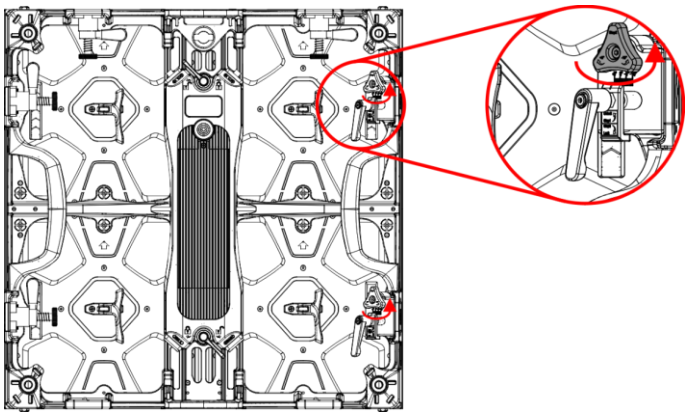

Fig. 52

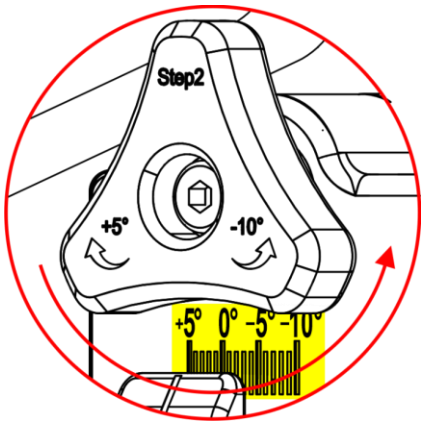

Fig. 53

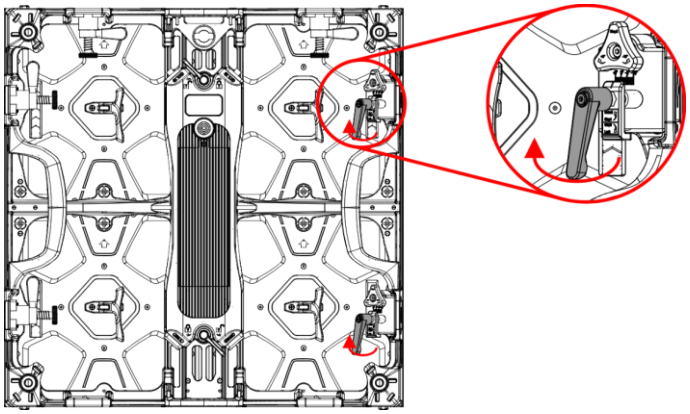

Fig. 54

The 4 angled options are: -5°, 0°, 5°, 10°.

Curved at -5°

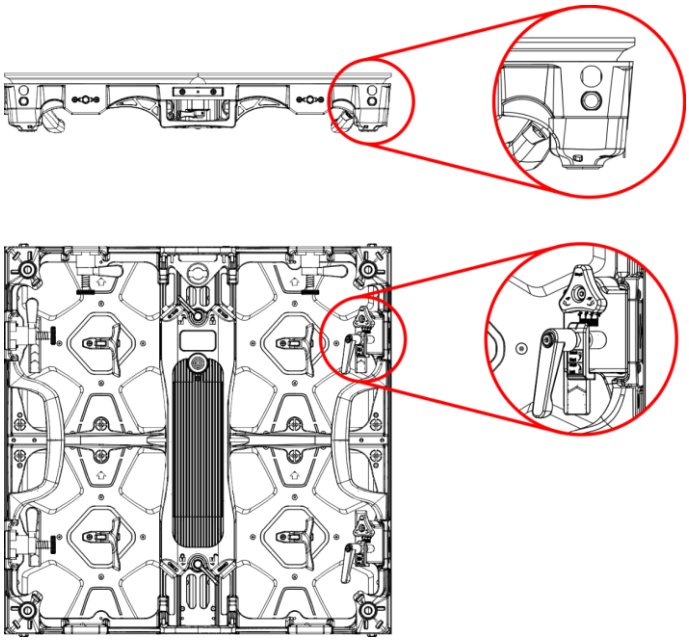

Fig. 55

Curved at 0°

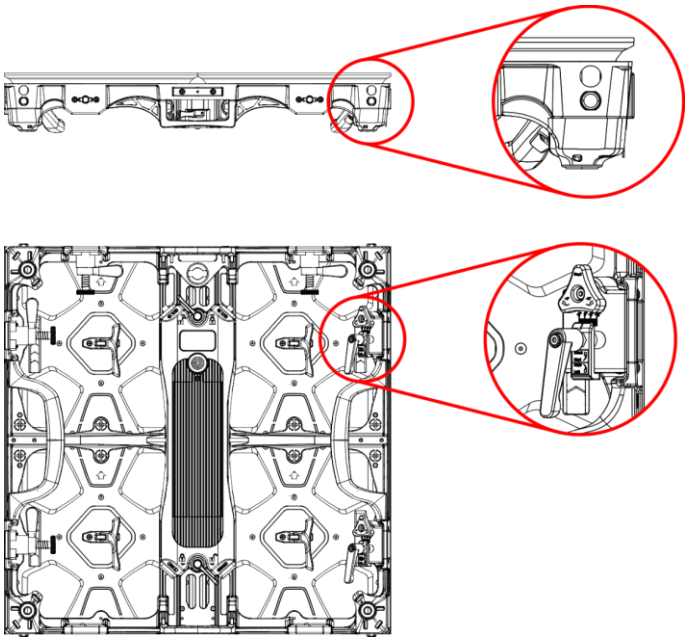

Fig. 56

Curved at 5°

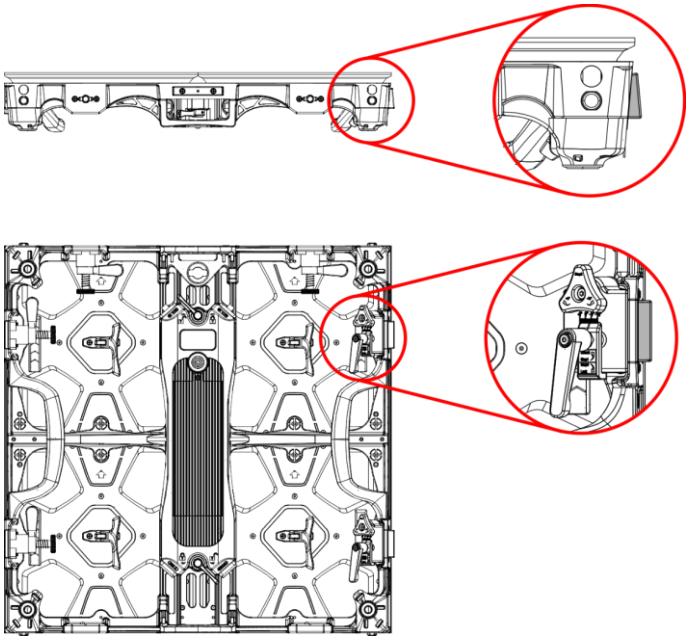

Fig. 57

Curved at 10°

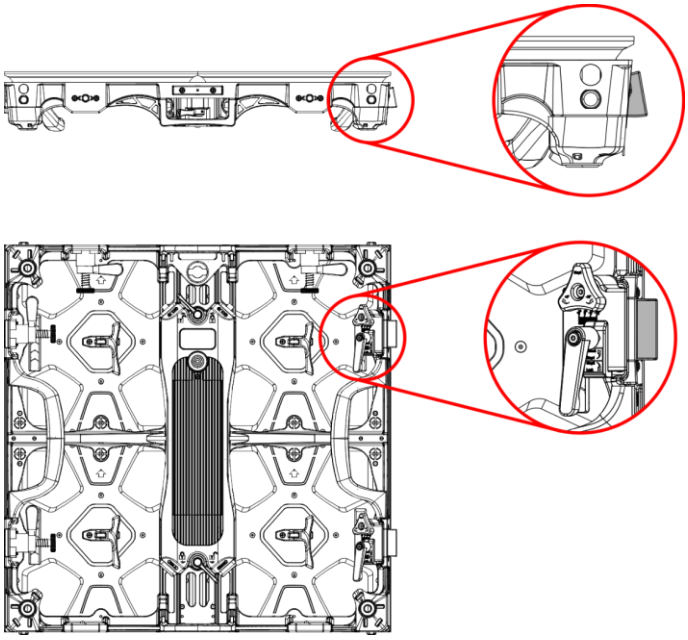

Fig. 58

5. Setup

5.1. Warnings and Precautions

Attention
Connect all data cables before supplying power.
Disconnect power supply before connecting or disconnecting data cables.

5.2. Setup Examples

5.2.1. Connecting Directly to a Personal Computer

You can directly connect the device to a personal computer, when the distance from the personal computer to the device is less than 50 m, as shown in Fig. 59.

To connect the device to a personal computer, see **5.3. Connecting multiple Devices on one Data Link**.

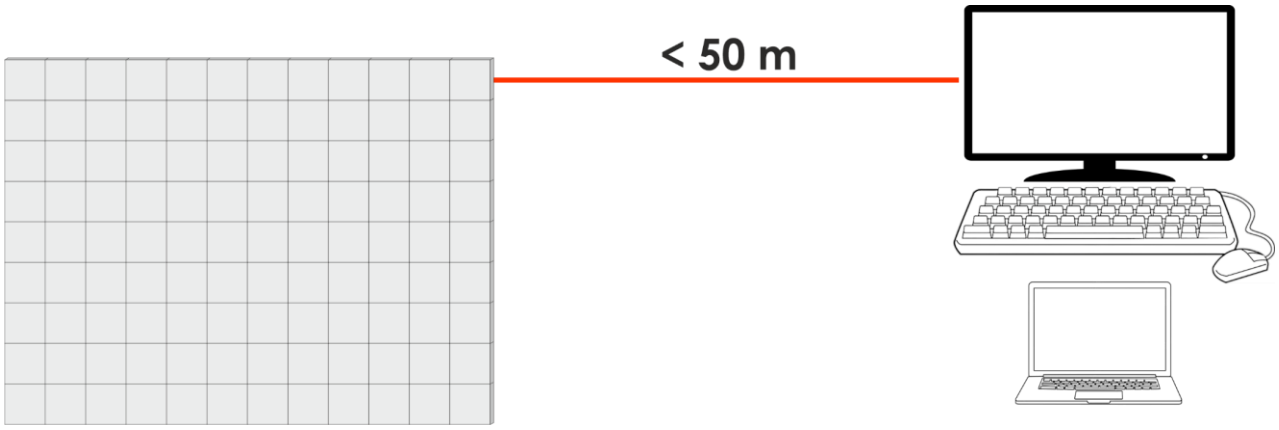

Fig. 59

5.2.2. Connecting via an Optic Transmitter/Receiver

If the distance between the personal computer and the device is more than 50 m, you need to use optic transmitter and receiver. The device must be connected to the receiver and the transmitter must be connected to the personal computer. For more information see Fig. 60.

To connect the device to a personal computer, see **5.3. Connecting multiple Devices on one Data Link**.

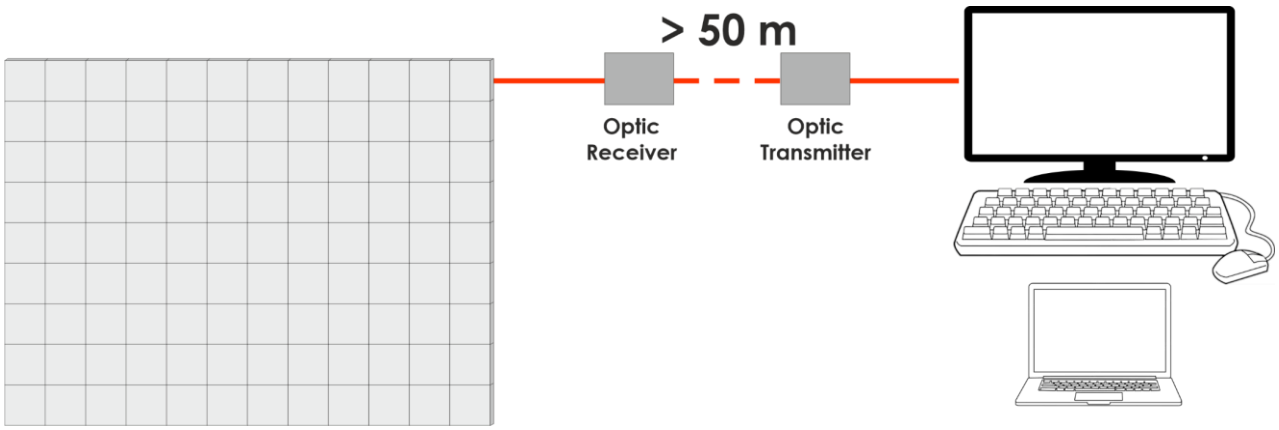

Fig. 60

5.3. Connecting Multiple Devices on One Data Link

To connect multiple devices on one data link, follow the steps below:

01) Make sure that the devices are not connected to the power supply.
02) Make sure that the first device is not connected to the personal computer.
03) Connect the **Data In/Out (04)** of the first device to the **Data In/Out (02)** of the next device in the setup.
04) Repeat step 3 to connect all other devices in a daisy-chain as shown in Fig. 61.
05) Connect the **Data In/Out (02)** of the first device to the personal computer.

Note:

- For horizontal connection, for example between LED screen 1 and 2, use the supplied horizontal signal link ProCat cable.
- For vertical connection, for example between LED screen 6 and 7, use a long data single link cable. The long data single link cable is not supplied with the device. You can use a cable from the FL57 series. Contact your Highlite International dealer for more information.

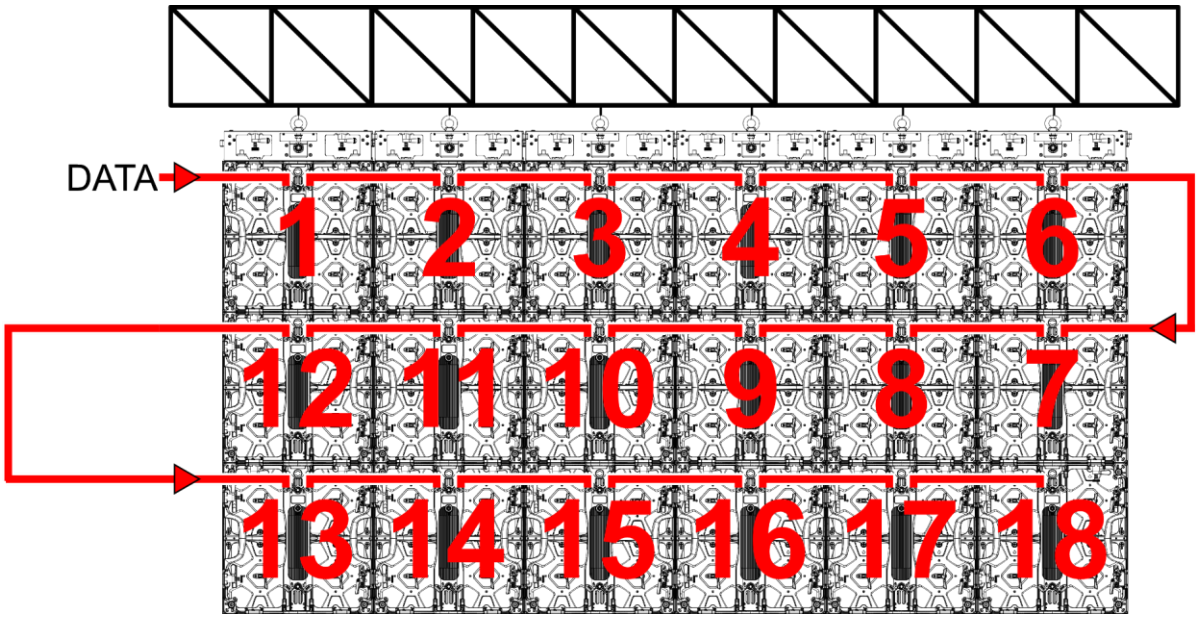

Fig. 61

5.4. Connecting to Power Supply

DANGER
Electric shock caused by short-circuit

The device accepts AC mains power at 100–240 V and 50/60 Hz. Do not supply power at any other voltage or frequency to the device.

This device falls under IEC protection class I. Make sure that the device is always electrically connected to the ground (earth).

Before connecting the device to the socket-outlet:

- Make sure that the power supply matches the input voltage specified on the information label on the device.
- Make sure that the socket-outlet has ground (earth) connection.

Note:

When creating setups with multiple rows of devices, do not connect the first device of each row to the power supply before you complete the setup. See **5.5 Power Linking of Multiple Devices** for more information.

5.5. Power Linking of Multiple Devices

This device supports power linking. Power can be relayed to another device via the **power Out (12)** connector. Note that the input and the output connectors have different designs: one type cannot be connected to the other.

Power linking of multiple devices must be carried out only by instructed or skilled persons.

WARNING
Incorrect power linking may lead to overload of the electrical circuit and result in serious injuries and damage of property.

To prevent overload of the electrical circuit, when power linking multiple devices:

- Use cables with sufficient current-carrying capacity. The power cable supplied with the device is suitable for power linking of multiple devices.
- Make sure that the total current draw of the device and all connected devices does not exceed the rated capacity of the power cables and the circuit breaker.
- Do not link more devices on one power link than the maximum recommended number.

Maximum recommended number of devices:
- at 100–120 V: 5 devices Alpha Series A3.9i
- at 200–240 V: 10 devices Alpha Series A3.9i

To connect multiple devices on one power link, follow the steps below:

01) Make sure that the devices are not connected to the power supply.
02) Connect the **Power Out (12)** of the first device to the **Power In (14)** of the next device with the supplied power cable.
03) Repeat step 2 to connect the rest of the devices in the setup, as shown in Fig. 62.
04) Connect the first device on each row, respectively the first device on one power link, to the power supply.

Note:

Make sure that maximum recommended number of devices on one power link is not exceeded.

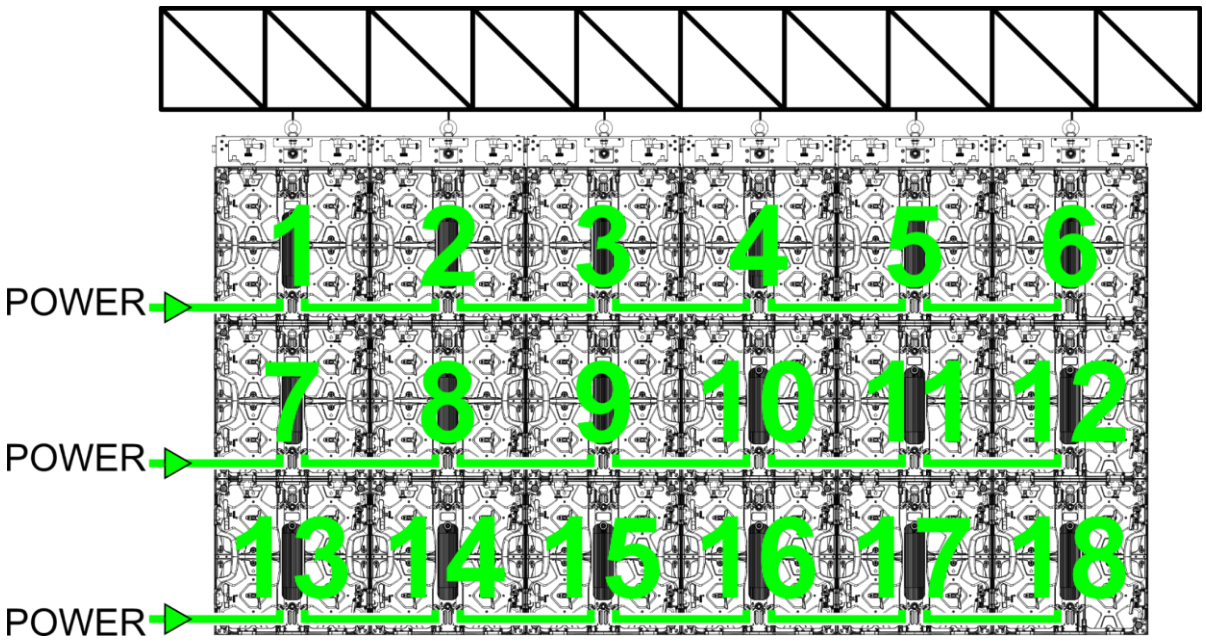

Fig. 62

6. Operation

6.1. Safety Instructions for Operation

Attention
This device must be used only for the purposes it is designed for.

This device is designed to be used as a LED screen module to be integrated as a partial image area of a larger display screen area. This device is not intended for use as a standalone display. It is suitable only for indoor installation.

Any other use, not mentioned under intended use, is regarded as non-intended and incorrect use.

6.2. Control Modes

The device is equipped with a built-in NovaStar control module.

You can control the device with a personal computer with the NovaStar software.

For more information about how to control the device, visit the website of NovaStar: https://www.novastar.tech/downloads/.

7. Troubleshooting

This troubleshooting guide contains actions which can be carried out by the user. The device does not contain user-serviceable parts.

Unauthorized modifications to the device will render the warranty void. Such modifications may result in injuries and material damage.

Refer servicing to instructed or skilled persons. Contact your Highlite International dealer in case the solution is not described in the table.

Problem	Probable cause(s)	Solution
The device does not function (LEDS on the backside are OFF)	No power to the device	• Make sure the device is connected to power supply and the cables are connect
	Internal fuse is blown	• Disconnect the device and contact your Highlite International dealer
The device does not function (LEDS on the backside are ON)	The device is not connected correctly	• Make sure the data cables are connected correctly • Replace the cables
	The device cannot output the received signal	• Make sure the connected devices (NovaStar processor) work correctly • Make sure the connected devices (processor) are compatible with NovaStar
The device responds erratically	The settings of the device are changed	• Reset the device's parameters to the default factory settings. See **6.2. Control Modes** on page 34
The device does not respond to data control	The data cables to the control box are not connected	• Connect the data cables
	The control box is defective	• Try using another control box. Contact your Highlite International dealer
Individual LED pixels on the LED screen do not work or flicker	Individual LED pixels on the LED screen module are damaged change panel	• Disconnect the device and change the LED screen module See **8.4. Replacing a LED Screen Module** on page 34. Contact your Highlite International dealer for a spare LED screen module
	Driver from LED screen module defective	• Disconnect the device and change the LED screen module See **8.4. Replacing a LED Screen Module** on page 34. Contact your Highlite International dealer for a spare LED screen module

8. Maintenance

8.1. Safety Instructions for Maintenance

DANGER
Electric shock caused by dangerous voltage inside

Disconnect power supply before servicing or cleaning.

Maintenance may be carried out by instructed or skilled persons. Service shall be carried out only by skilled persons. Contact your Highlite International dealer for more information.

8.2. Preventive Maintenance

Attention
Before use, examine the device visually for any defects.

Make sure that:

- There are no deformations on housings, fixations and installation points.
- The power and data cables are not damaged and do not show any material fatigue.
- All wall mount screws used for installing the device or parts of the device are tightly fastened and are not corroded.
- The locking mechanisms are not damaged.

8.2.1. Basic Cleaning Instructions

To clean the device, follow the steps below:

01) Disconnect the device from the electrical power supply.
02) Allow the device to cool down for at least 5 minutes.
03) Remove the dust collected on the external surface with dry compressed air and a soft brush.

Attention

- Do not immerse the device in liquid.
- Do not use alcohol or solvents.
- Make sure that the connections are fully dry before connecting the device to the power supply and to other devices.

8.3. Corrective Maintenance

The device does not contain user-serviceable parts. Do not open the device and do not modify the device.

Refer repairs and servicing to instructed or skilled persons. Contact your Highlite International dealer for more information.

8.4. Replacing a LED Screen Module

To replace a LED screen module, follow the steps below:

01) Turn the **service handle (15)** clockwise, as shown in Fig. 63.
02) Hold the **service handle (15)** with one hand and push the LED screen module out of the **cabinet frame (18)**, as shown in Fig. 64 and 65.
03) While holding the LED screen module by the **service handle (15)**, turn the LED screen module carefully sideways and remove it from the backside of the **cabinet frame (18)**, as shown in Fig. 66.

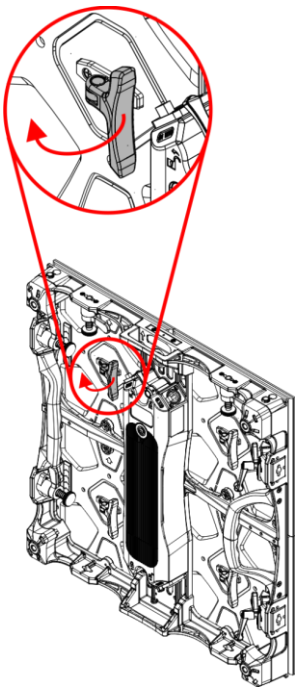

Fig. 63

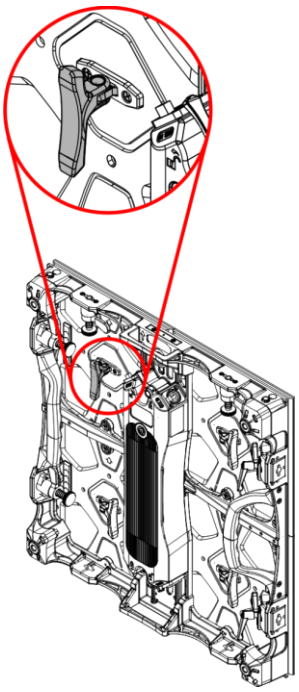

Fig. 64

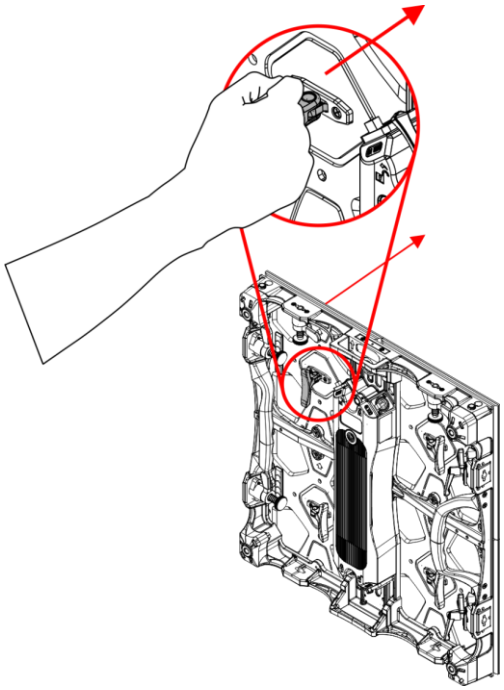

Fig. 65

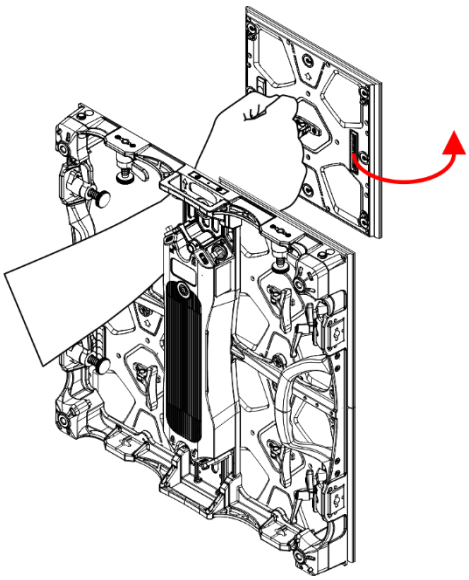

Fig. 66

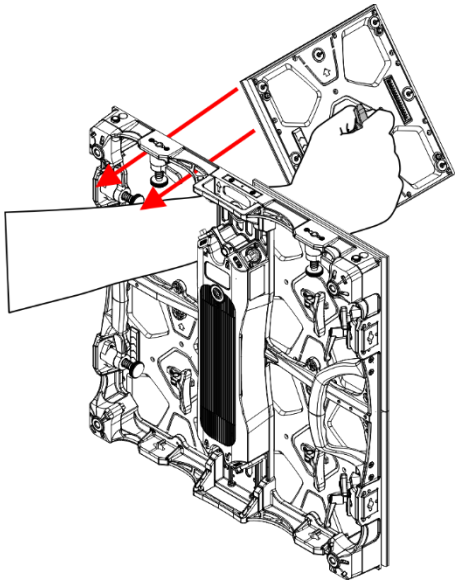

Fig. 67

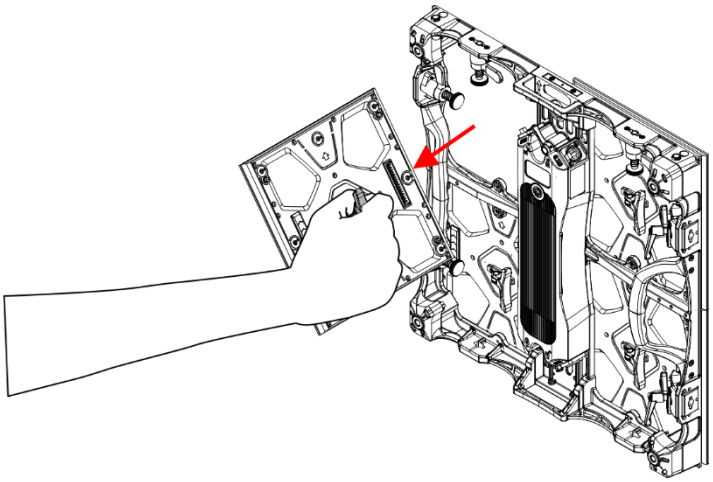

Fig. 68

8.5. LED Screen Module Calibration

The control box uploads the calibration data from the control box to a newly installed LED screen module, follow the steps below:

8.5.1. Manual Calibration

01) Disconnect all data cables.
02) Disconnect the device from the power supply.
03) Hold down the **test button (05)** and connect the device to the power supply. The LED screen will power up and the power LED indicator inside the **test button (05)** will light up red.
04) Continue to hold down the **test button (05)** for 10 seconds.
05) Release the **test button (05)**. The green LED indicator inside the **test button (05)** will rapidly flash. The newly installed LED screen module downloads the calibration data from the control box. After the calibration is finished the green LED indicator inside the **test button (05)** flashes once every 2 seconds. The brightness of the newly installed LED screen module will be automatically matched to the rest of the LED screen. This will ensure that all 4 LED screen modules are calibrated in the same way.

8.5.2. Digital Calibration

See the https://www.novastar.tech for instructions on how to perform a calibration with a personal computer.

8.5.3. LED Indicator Status

LED Indicator:	Description
Red LED indicator ON	Power ON
Green LED indicator rapidly flashes	Downloading the calibration data
Green LED indicator flashes once every 2 seconds	Calibration finished

8.6. Replacing the Control Box

To replace the control box, follow the steps below:

01) Turn the top **locking lever (13)** to the left, to loosen the control box from the LED screen, as shown in Fig. 69.
02) Turn the bottom **locking lever (13)** to the right to loosen the control box from the LED screen on the bottom of the LED screen.
03) Remove the control box, as shown in Fig. 70 and 71.

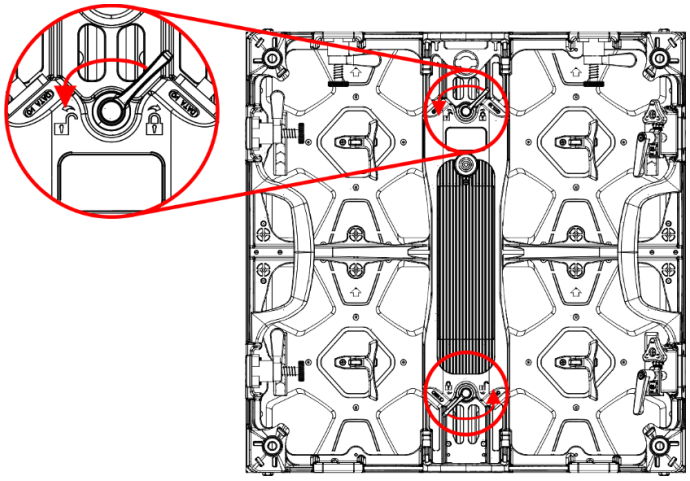

Fig. 69

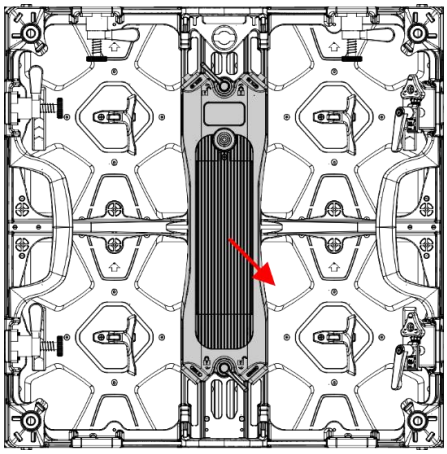

Fig. 70

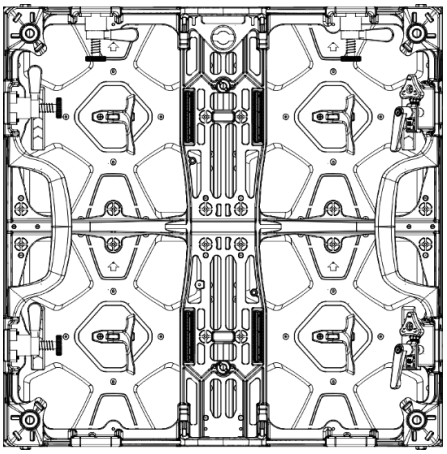

Fig. 71

9. Deinstallation, Transportation and Storage

9.1. Instructions for Deinstallation

WARNING
Incorrect deinstallation can cause serious injuries and damage of property.

- Let the device(s) cool down before dismounting.
- Disconnect power supply before deinstallation.
- Always observe the national and site-specific regulations during deinstallation and derigging of the device.
- Wear personal protective equipment in compliance with the national and site-specific regulations.

To deinstall the device(s), follow the steps from the Installation and Setup chapters in reverse order.

9.2. Instructions for Transportation

- Use the original packaging to transport the device, if possible.
- Always observe the handling instructions printed on the outer carton box, for example: “Handle with care”, “This side up”, “Fragile”.

9.3. Storage

- Clean the device before storing. Follow the cleaning instructions in chapter **8.2.1. Basic Cleaning Instructions** on page 36.
- Store the device in the original packaging, if possible.

10. Disposal

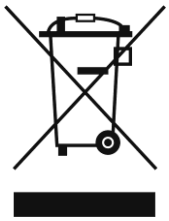

Correct disposal of this product

Disposal of Old Electrical and Electronic Equipment (Applicable in the European Union and other European countries with separate collection systems)

This symbol on the product, its packaging or documents indicates that the product shall not be treated as household waste. Dispose of this product by handing it to the applicable collection point for the recycling of electrical and electronic equipment. This is to avoid environmental damage or personal injury due to uncontrolled waste disposal. For more detailed information about recycling of this product contact the local authorities or the authorized dealer.

11. Approval

CE

UK CA

Check the respective product page on the website of Highlite International (www.highlite.com) for an available declaration of conformity.

DUTCH MEDIA TOOLS

©2022 DMT